LVS222BIN

Product Family	Dishwashers
Commercial width	60 cm
Commercial height	85 cm
Installation	Free-standing
N° baskets	2
EAN code	8017709289997



Programs

N. of programmes	5	**Mix**	Yes
Washing temperatures	50, 65, 70 °C	**Intense**	Yes
Soak	Yes	**1/2 load**	Yes
ECO	Yes		

Options

Delay timer option	3-6-9 hours	**Extra dry option**	Yes

Baskets

Basket colour	Grey	**Lower Basket**	With 2 foldable racks
Basket components colour	Grey	**Lower basket with anti-drip inserts**	Yes
Handle	In plastic on upper and lower basket	**Largest loadable dish in lower basket**	30,0 cm
Upper Basket	With central fixed racks	**Colour Inner Components**	Green
Height adjustment of the upper basket	On two levels, by extraction	**Cutlery basket**	13 place settings sliding
Largest loadable dish in upper basket	25,0 cm		

Technical Features




Width (mm)	598 mm
Depth (mm)	600 mm
Product Height (mm)	848 mm
Controls	Electronic
Programme graphics	Symbols
Salt light indicator	Light
Rinse aid indicator	Light
End of cycle indicator	Led on display, with acoustic signal
Washing system	Orbital
Third spray arm	Single
Water softener	With electronic setting
Flood protection system	Total Acquastop
Water supply	Single; cold/hot water max. 60°C - energysave with hot water up to 35%
Max water hardness	100°fH;58°dH
Drying system	Natural condenser drying
Tub material	Stainless steel
Filter	Stainless steel
Concealed heating element	Yes
Hinges	Self balancing with fixed hinges
Adjustable feet	Just for levelling
Back cover	Yes, with covered counterweight
Depth of dishwasher with open door (mm)	1168 mm
Removable top	Yes, with optional KIT
Top cover	In plastic

Performance / Energy Label - Reg. 2019







Energy Efficiency Class	E
Energy consumption [per 100 cycles, based on the eco programme]	90 kWh
Rated capacity (ps)	13
Water consumption [per cycle]	12,0 litres
Programme duration	3:20 h:min
Airborne acoustical noise emissions	49 dB(A) re 1 pW
Airborne acoustical noise emission class	C
Energy efficiency Index (EEI)	53,7

Electrical Connection

Connected power	1800 W
Current	10 A
Voltage	220-240 V
Frequency (Hz)	50 Hz
Type of connection	Single-phase
Power supply cable length	140 cm
Plug	(F;E) Schuko

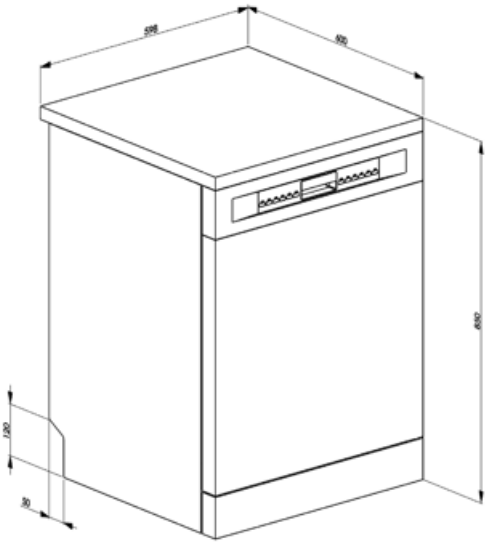
598
820
820
120
30

Compatible Accessories

KITGH

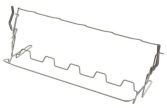

Kit glass holder. It has to be fitted on the first basket but only if there are foldable racks

KITINC

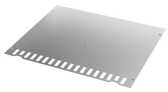

KITPLV2



Kit extension for dishwasher and washing machine: lenght mt. 2

Symbols glossary



To improve the drying of dishes without leaving stains.



Energy efficiency class E



Smeg's evolution towards more intelligent and eco-friendly models has led to the choice of Inverter technology, which significantly reduces consumption.



EXTRA DRY This option adds a hot rinse cycle that ensures improved drying.



1/2 load: This program is designed for washing dishes not heavily soiled with partial load of the dishwasher.



Mix: The Mix programme is suitable for mixed crockery and everyday pots and pans, without any particular incrustation.



Ultraclean: The Ultraclean option performs a final rinse at a high temperature of 70°c eliminating virtually all bacteria.



Total Acquastop: In addition to the partial Acquastop protection present in all Smeg dishwashers, some models have an electronic device fitted to the water intake hose, which monitors water levels in the machine, detects leaks in the hose and switches off the water supply immediately when necessary.



A++: Energy efficiency class A++ helps to save up to 20% energy compared to class A. Maximum performance with minimum consumption is guaranteed.



Delay Timer: Option to postpone the start of the desired programme by up to 24 hours in order to programme the dishwasher to run at the desired time.



Noise Level: Excellent insulation and special devices keep noise to a minimum.



Orbital wash system distributes water evenly throughout the 60cm dishwasher cavity, directing water with precision to ensure an excellent wash.



Eco: Eco, this economic wash programme uses a low amount of water and energy in order to provide the most environmentally friendly cleaning option.



Soak programme: The soak programme provides a rinse to prevent dirt from drying.



13 place settings: Number of place settings.



System WaterSave ensures the best washing results with minimal water consumption depending on the model of dishwasher.