LVS262EB

Product Family	Dishwashers
Commercial width	60 cm
Commercial height	85 cm
Installation	Free-standing
N° baskets	2
EAN code	8017709334093



Programs

N. of programmes	8	**Mix**	Yes
Washing temperatures	50, 60, 65, 70 °C	**Self clean**	Yes
Soak	Yes	**Intense 60°**	Yes
Full express - 60 minutes	Yes	**Mix 60°**	
		Auto 50°-60°	Yes
Express 50°	Yes		
ECO	Yes		

Options

Delay timer option	Up to 24 hours	**Crystal option**	Yes
Extreme option	Yes	**Sterilise option**	Yes

Baskets

Basket colour	Grey	**Lower Basket**	With fixed racks
Basket components colour	Grey	**Largest loadable dish in lower basket**	31.0 cm
Upper Basket	With central fixed racks	**Colour Inner Components**	Grey
Height adjustment of the upper basket	On two levels (4 cm)	**Cutlery basket**	Yes
Largest loadable dish in upper basket	20,0 cm		

Technical Features



Width (mm)	598 mm
Depth (mm)	600 mm
Display type	LED display
Product Height (mm)	848 mm
Controls	Electronic
Display	Delayed start, Programme time indicator, Time to end indication
Programme graphics	Symbols
Salt light indicator	Light
Rinse aid indicator	Light
Progress indicator	Yes
End of cycle indicator	On display, with acoustic signal
Washing system	Standard
Third spray arm	Single
Water softener	With electronic setting
Turbidity sensor Aquatest	Yes
Water supply	Single; cold/hot water max. 60°C - energysave with hot water up to 35%
Max water hardness	90°fH; 50°dH
Drying system	Natural condenser drying, with Dry Assist automatic door opening system at the end of the cycle
Tub material	Stainless steel
Filter	Stainless steel
Concealed heating element	Yes
Hinges	Self balancing with fixed hinges
Adjustable feet	Just for levelling
Depth of dishwasher with open door (mm)	1146 mm
Removable top	Yes
Top cover	In plastic

Performance / Energy Label - Reg. 2019

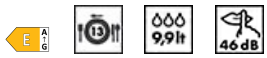

Energy Efficiency Class	E
Energy consumption [per 100 cycles, based on the eco programme]	94 kWh
Rated capacity (ps)	13
Water consumption [per cycle]	9,9 litres
Programme duration	4:00 h:min
Airborne acoustical noise emissions	46 dB(A) re 1 pW
Airborne acoustical noise emission class	C
Energy efficiency Index (EEI)	55,9

Electrical Connection

Connected power	1950 W
Current	10 A
Voltage	220-240 V
Frequency (Hz)	50 Hz
Type of connection	Single-phase
Power supply cable length	150 cm
Plug	(F;E) Schuko

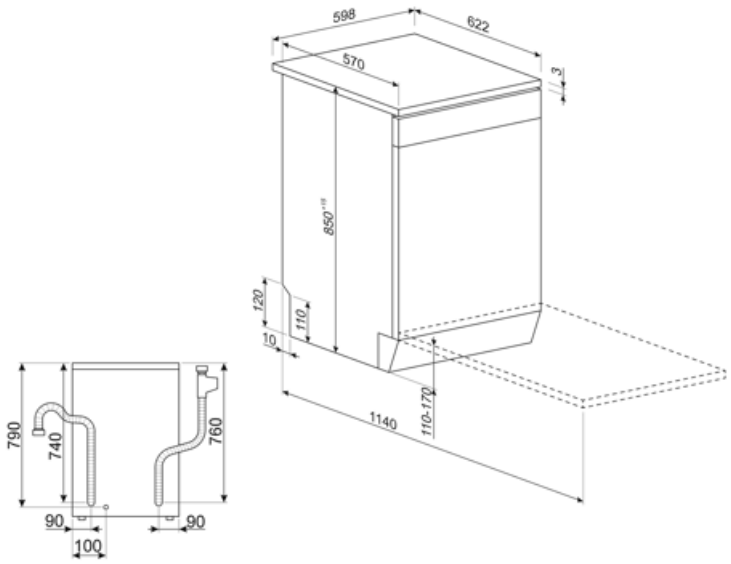
598
622
570
3
850+10
120
110
10
1140
110-170
790
740
760
90
90
100

Compatible Accessories

KITINC

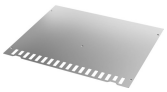

KITPLV2

Kit extension for dishwasher and washing machine: lenght mt. 2



Symbols glossary



The Aquatest sensor is an electronic sensor that measures the degree of water transparency at the end of the initial soaking phase. ased on the values measured, the sensor sets the most suitable programme, thus obtaining the best washing results with the minimum amount of water.



Delay Timer: Option to postpone the start of the desired programme by up to 24 hours in order to programme the dishwasher to run at the desired time.



Noise Level: Excellent insulation and special devices keep noise to a minimum.



Mix: The Mix programme is suitable for mixed crockery and everyday pots and pans, without any particular incrustation.



Soak programme: The soak programme provides a rinse to prevent dirt from drying.



Quick wash cycle for normally soiled mixed loads such as dishes and pans, even with dried-on residues. Dishes are washed and dried in 60 minutes.



Wash cycle for normally soiled mixed loads such as dishes and pans, even with dried-on residues. When this program is selected, the dishwasher recognises the type of dirt and automatically adjusts the washing parameters as appropriate.



Option which improves the washing results of the selected programme. It increases the wash temperature and duration.



System WaterSave ensures the best washing results with minimal water consumption depending on the model of dishwasher.



Energy efficiency class E



This option provides special care for a delicate load. It prevents rapid changes in the wash temperature of the selected programme and reduces it to 4



Eco: Eco, this economic wash programme uses a low amount of water and energy in order to provide the most environmentally friendly cleaning option.



A quick programme suitable for washing a load with fresh and light soil.



13 place settings: Number of place settings.



Dishwasher cleaning cycle. The cycle should be started with the machine empty, without dishes. It is recommended to run the program every 2-3 months, using special dishwasher detergents.



Programme suitable for washing and drying heavily soiled items with encrusted residues.



Option which provides better cleaning results by keeping the temperature between 65 and 70°C for at least 10 minutes during the last rinsing phase.



The work aimed at continuous improvement has allowed the creation of the second generation of the Inverter motor 2.0, characterised by greater efficiency and durability over time, which allows very high performance and a lower energy consumption and noise level.