LYP791S

Sink material	Stainless steel
Type	Monoblock sink
No. of bowls	1
Drainer	Left
EAN code	8017709273576



Aesthetics

Aesthetic	Universale	**Building in type**	Standard
Colour	Stainless Steel	**Logo**	Embossed
Finishing	Pre-polished	**Tap hole / precut tap hole**	1 Tap hole
Series	Omni		

	Bowl type RH	Bowl thickness (mm)	Bowl dimensions, WxDxH (mm)	Bowl depth (mm)	Radius corner right bowl (mm)	Overflow	Strainer position	Strainer dimension
RH Bowl	Traditional	0.6	370 x 370 x 150	150	80	Yes, traditional	Side bowl	3.5"

Technical Features

Frame thickness	0,6 mm	**Tap hole**	1
Frame depth (mm)	10	**Tap hole diameter**	35 mm
Dimensions of the product (mm)	150x790x500 mm	**Drainer inclination**	1 °
Cutout dimension topmount (mm)	770 x 480 mm	**Gasket type**	Sealing paste
Height from kitchen top	8 mm	**No. of clips**	6
Base unit size	45 cm	**Type of clips**	Standard

Accessories included

Accessories for installation	Strainer, Siphon with dishwasher outlet connection, Fixing clips, Gasket

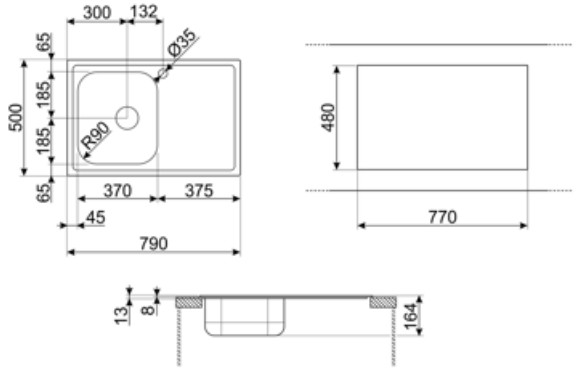

Compatible Accessories



3712

Siphon single bowl sinks (dishwasher connection included)



KITFD050

Waste disposal 0,5 HP, Motor: 1/2 horsepower, Fits all sinks with 3 1/2" waste outlet



KITFD075

Waste disposal 0,75 HP, Motor: 1/2 horsepower, Fits all sinks with 3 1/2" waste outlet



KITFD100

Waste disposal 1 HP, Motor: 1/2 horsepower, Fits all sinks with 3 1/2" waste outlet



RND1V

Rondò waste kit 1 bowl with standard overflow



STABMIX

Tap stabiliser

Symbols glossary



Cupboard width required for sink installation.



Sink depth - depending on the model, the depth can be from13 to 24,5.



Standard installation: Traditional installation in tabletop, suitable for any kitchen sets.