LYP862

Sink material	Stainless steel
Type	Monoblock sink
No. of bowls	2
EAN code	8017709251611



Aesthetics

Aesthetic	Universale	**Building in type**	Standard
Colour	Stainless Steel	**Logo**	Embossed
Finishing	Pre-polished	**Tap hole / precut tap hole**	1 Tap hole
Series	Omni		

	Bowl type RH	Bowl thickness (mm)	Bowl dimensions, WxDxH (mm)	Bowl depth (mm)	Radius corner right bowl (mm)	Overflow	Strainer position	Strainer dimension
RH Bowl	Traditional	0.6	370 * 370 * 149	150	90	Yes, traditional	Side bowl	3.5"
LH Bowl	Traditional	0.6	370 * 370 * 149	150	90		Side bowl	3.5"

Technical Features

Frame thickness	0,6 mm	**Tap hole**	1
Frame depth (mm)	8	**Tap hole diameter**	35 mm
Dimensions of the product (mm)	150x860x500 mm	**Dividing wall width**	40 mm
Cutout dimension topmount (mm)	840 x 480 mm	**Gasket type**	Sealing paste
		No. of clips	8
Undermount cutout radius	10 mm	**Type of clips**	Standard

Height from kitchen top	8 mm
Base unit size	90 cm

Accessories included

Accessories for installation	Strainer, Siphon with dishwasher outlet connection, Fixing clips, Gasket

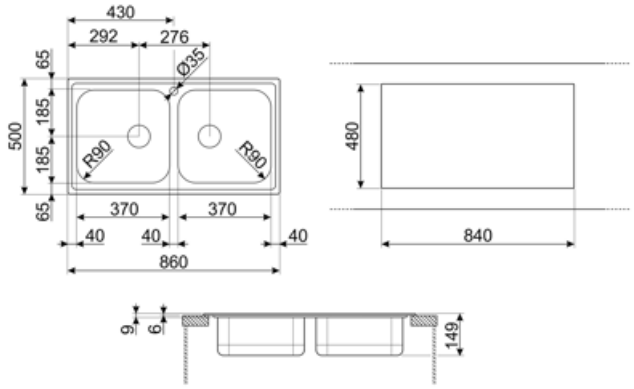

Compatible Accessories



3713

Siphon double bowls sinks (dishwasher connection included)



KITFD050

Waste disposal 0,5 HP, Motor: 1/2 horsepower, Fits all sinks with 3 1/2" waste outlet



KITFD075

Waste disposal 0,75 HP, Motor: 1/2 horsepower, Fits all sinks with 3 1/2" waste outlet



KITFD100

Waste disposal 1 HP, Motor: 1/2 horsepower, Fits all sinks with 3 1/2" waste outlet



RND2V

2 Bowls standard Rondò waste kit with rectangular overflow



STABMIX

Tap stabiliser

Symbols glossary



Cupboard width required for sink installation.



Sink depth - depending on the model, the depth can be from13 to 24,5.



Standard installation: Traditional installation in tabletop, suitable for any kitchen sets.