LZ150B

Sink material	Composite
Type	Composite sink
No. of bowls	1
Drainer	Reversible
EAN code	8017709274610



Aesthetics

Aesthetic	Universale	**Logo**	Applied/on overflow
Colour	White	**Alternative colours available**	Anthracite, Cream, Beige, Cemento / Concrete
Series	Rigae	**Tap hole / precut tap hole**	Prepared
Building in type	Standard		

	Bowl type LH	Bowl dimensions LH, WxDxA (mm)	LH Bowl depth (mm)	Radius corner left bowl	Overflow LH bowl	Strainer position LH bowl	Strainer dimension LH bowl
LH Bowl	Traditional	420 x 480 x 200	200	70	Yes, traditional	Side bowl	3.5"

Technical Features

Characteristics composite material	Antibacterial, Easy to clean, Anti-scratch , Termal schock resistant, High temperatures resistant, Impact resistant, UV Resistant	**Base unit size**	60 cm
		Tap hole	2
		Tap hole diameter	35 mm
		Drainer inclination	2 °
		No. of clips	10
		Type of clips	Standard
Frame depth (mm)	10		
Dimensions of the product (mm)	200x1000x500 mm		
Cutout dimension topmount (mm)	980 X 480 mm		

Undermount cutout radius	30 mm
Height from kitchen top	10 mm

Accessories included

Accessories for installation	Strainer, Savespace siphon with dishwasher outlet connection, Fixing clips

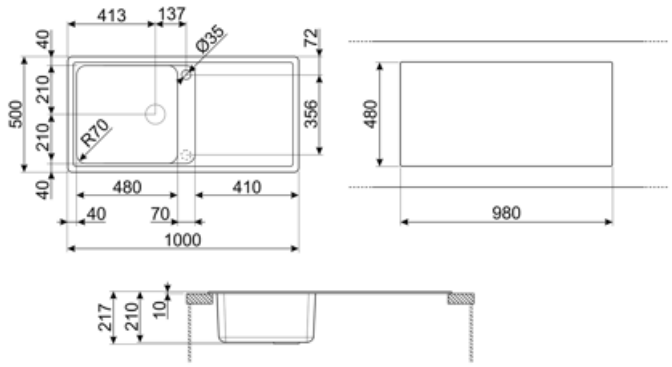

Compatible Accessories



KITDSQ

Soap dispenser chrome finishing with square knob 40x40 mm



KITFD050

Waste disposal 0,5 HP, Motor: 1/2 horsepower, Fits all sinks with 3 1/2" waste outlet



KITFD075

Waste disposal 0,75 HP, Motor: 1/2 horsepower, Fits all sinks with 3 1/2" waste outlet



KITFD100

Waste disposal 1 HP, Motor: 1/2 horsepower, Fits all sinks with 3 1/2" waste outlet

Alternative products



LZ150CT

Colour: Cement / Concrete



LZ150AV2

Colour: Oats



LZ150P

Colour: Cream



LZ150A2

Colour: Anthracite

Symbols glossary



Antibacterial



Antiscratch



Cupboard width required for sink installation.



Sink depth - depending on the model, the depth can be from13 to 24,5.



Standard installation: Traditional installation in tabletop, suitable for any kitchen sets.



Easy to clean



High temperatures resistant



Impact resistant



Thanks to the double tap hole, most of our sinks are easily reversible, giving you the flexibility to make any type of kitchen composition.



Termal schock resistant



UV protection, does not fade over time.