LZ862P

Sink material	Composite
Type	Composite sink
No. of bowls	2
EAN code	8017709183240

Aesthetics

Aesthetic	Universale	**Logo**	Applied/on overflow
Colour	Cream	**Alternative colours available**	White, Anthracite, Beige, Copper, Cemento / Concrete
Series	Rigae	**Tap hole / precut tap hole**	Prepared
Building in type	Standard		

	Bowl type RH	Bowl dimensions, WxDxH (mm)	Bowl depth (mm)	Radius corner right bowl (mm)	Overflow	Strainer position	Strainer dimension
RH Bowl	Traditional	371 x 420 x 210	210	80	Yes, traditional	Side bowl	3.5"
LH Bowl	Traditional	371 x 420 x210	210	80		Side bowl	3.5"

Technical Features

Characteristics composite material	Antibacterial, Easy to clean, Anti-scratch , Termal schock resistant, High temperatures resistant, Impact resistant, UV Resistant	**Tap hole**	2
		Tap hole diameter	35 mm
		Dividing wall width	38 mm
		No. of clips	8
		Type of clips	Standard
Frame depth (mm)	10	**Possibility to install waste disposal**	Yes

Dimensions of the product (mm)	210x860x500 mm
Cutout dimension topmount (mm)	840 X 480 mm
Undermount cutout radius	30 mm
Height from kitchen top	10 mm
Base unit size	90 cm

Accessories included

Accessories for installation	Strainer, Savespace siphon with dishwasher outlet connection, Fixing clips

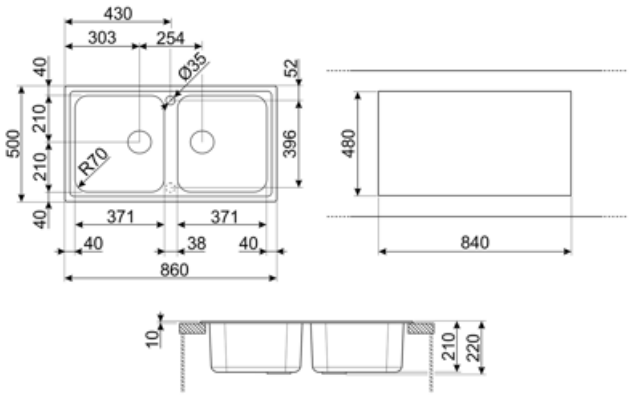

Compatible Accessories

KITDSQ

Soap dispenser chrome finishing with square knob 40x40 mm

KITFD050

Waste disposal 0,5 HP, Motor: 1/2 horsepower, Fits all sinks with 3 1/2" waste outlet

KITFD075

Waste disposal 0,75 HP, Motor: 1/2 horsepower, Fits all sinks with 3 1/2" waste outlet

KITFD100

Waste disposal 1 HP, Motor: 1/2 horsepower, Fits all sinks with 3 1/2" waste outlet

Alternative products

LZ862B

Colour: White

LZ862CT

Colour: Cement / Concrete

LZ862AV2

Colour: Oats

LZ862A2

Colour: Anthracite

Symbols glossary

Cupboard width required for sink installation.

Sink depth - depending on the model, the depth can be from13 to 24,5.

Standard installation: Traditional installation in tabletop, suitable for any kitchen sets.

Antibacterial

Antiscratch

Termal schock resistant

High temperatures resistant

Impact resistant

Easy to clean

UV protection, does not fade over time.