M16CSP

Product family	Taps
Material	Brass
Swivelling spout	Yes
Swivelling spout rotation	360 °



Aesthetics

Aesthetic	Universale	**Finishing**	Brushed
Colour	Chrome	**Jet type**	Single jet
Spout type	L spout	**Aerator**	Yes
Tap type	Single lever	**Flexible hoses number**	2

Technical Features

Flexible hoses lenght	500 mm	**Optimal pressure**	3 bar
Flexible hoses connection	3/8 "	**Water production (l/min)**	10,8 l/min
Maximum pressure	5 bar	**Ceramic disc cartridge type**	25 Ø
Minimum pressure	0,5 bar	**Tap hole diameter**	35 mm

Logistic Information

Product height (mm)	231 mm

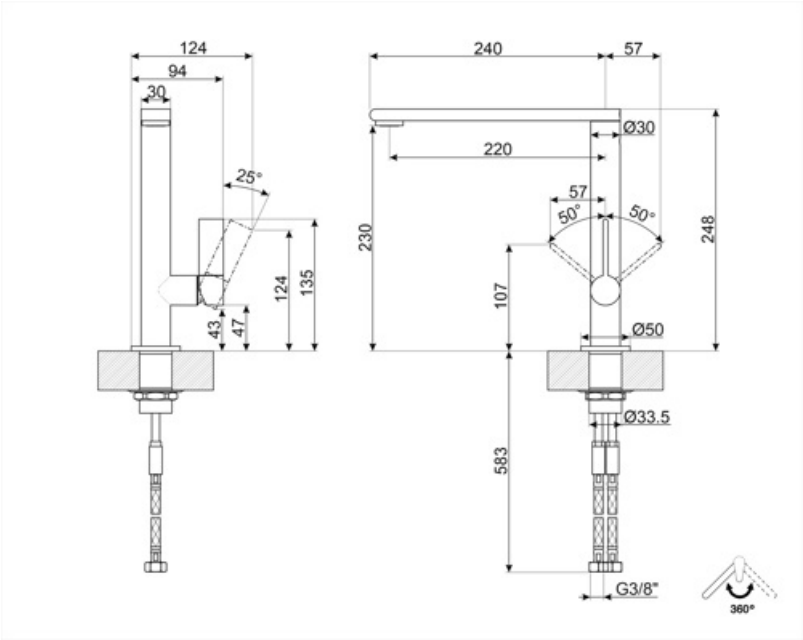
124
94
30
25°
124
135
43
47
240
57
Ø30
220
57
50°
50°
230
248
107
Ø50
Ø33.5
583
G3/8"
360°

Symbols glossary



Swivel spout rotation 360°