MAFD1CR



Product familie	Kranen
Materiaal	Messing
Draaibare uitloop	Ja
Rotatie draaibare uitloop	360 °

Design

Design	Universeel	**Filter included**	Si
Kleur	Chroom	**Sproeier**	Extractable
Spout type	L spout	**Jet type**	Single jet
Type kraan	Double lever filtered water	**Aerator**	Yes with double flow for filtered water
Afwerking	Glanzend	**Aantal flexibele slangen**	5
Handle for filtered water supply	Ja		

Technische specificaties

Lengte flexibele slang	470 mm	**Diameter kraangat**	35 mm
Aansluiting flexibele slangen	3/8 "	**Non-return valve**	Ja
Maximum druk	5 bar	**Waterzuiveringsfilter**	Ja
Minimum druk	0,5 bar	**Water depuration filter type**	Activated carbon
Optimale druk	3 bar	**Filtration**	Cloro, sedimenti, protozoi e cisti, composti organici volatili
Water production (l/min)	6 l/min	**Filtration degree**	0.5 micron
Type cartouche met keramische schijven	35 Ø	**Inlet temperature**	4.4 - 38 °C

Logistieke informatie

Hoogte product (mm)	299 mm

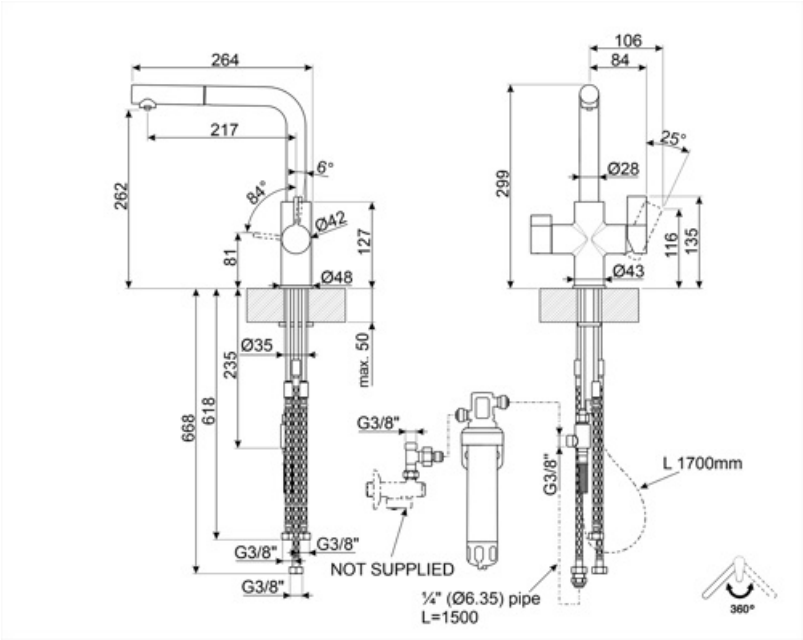
264
217
262
6°
84°
Ø42
127
81
Ø48
Ø35
235
618
668
max. 50
G3/8"
G3/8"
G3/8"
G3/8"
NOT SUPPLIED
¼" (Ø6.35) pipe
L=1500
106
84
25°
299
Ø28
116
135
Ø43
G3/8"
L 1700mm
360°

Compatible Accessories



KITMAF

Replacement water filter under-sink for supplying cold filtered water from the tap. Compatible with MAF50BL, MAF50CR, MAF50WH, MAFD1CR, MAFD1MN

Alternative products



MAFD1MN

Kleur: Zwart

Symbols glossary



Swivel spout rotation 360°



The extractable handshower allows to increase the range of action of the tap and it is extremely versatile, practical and comfortable.