MD22CUX1



Product family	Taps
Material	Brass
Swivelling spout	Yes
Swivelling spout rotation	360 °

Aesthetics

Aesthetic	Universale	**Handshower**	Extractable
Colour	Copper	**Jet type**	Single jet
Spout type	L spout	**Aerator**	Yes
Tap type	Single lever	**Flexible hoses number**	2
Finishing	PVD Brushed		

Technical Features

Flexible hoses lenght	450 mm	**Optimal pressure**	3 bar
Flexible hoses connection	3/8 "	**Ceramic disc cartridge type**	25 Ø
Maximum pressure	5 bar	**Tap hole diameter**	35 mm
Minimum pressure	0,5 bar	**Non-return valve**	Yes

Logistic Information

Product height (mm)	294 mm

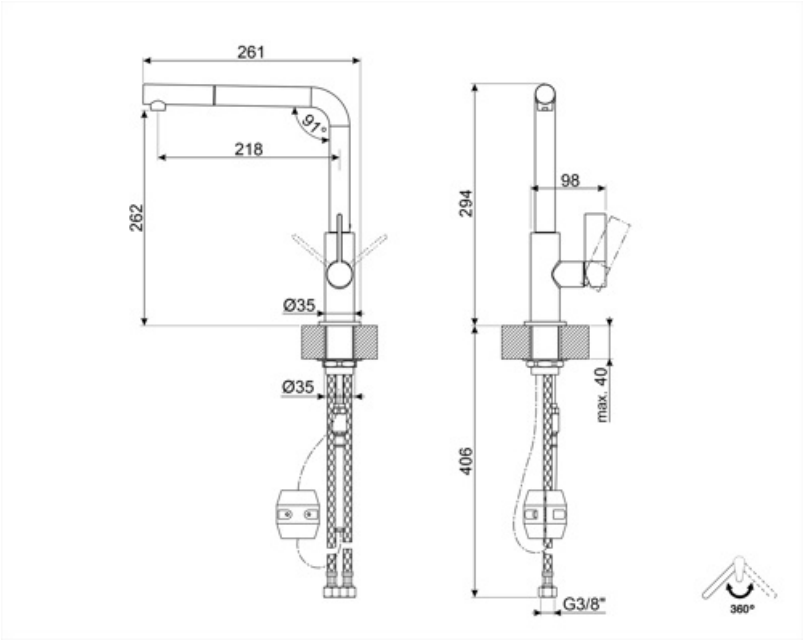
261
97°
218
262
Ø35
Ø35
294
98
max. 40
406
G3/8"
360°

Symbols glossary



Swivel spout rotation 360°



The extractable handshower allows to increase the range of action of the tap and it is extremely versatile, practical and comfortable.