MDF50EGM

Product family	Taps
Material	Brass
Swivelling spout	Yes
Swivelling spout rotation	360 °

Aesthetics

Aesthetic	50's Style	**Handshower**	Mobile semi-professional
Colour	Emerald Green	**Jet type**	Single jet
Spout type	Spring spout	**Aerator**	Yes
Tap type	Semi-professional single lever	**Flexible hoses number**	2
Finishing	Matt		

Technical Features

Characteristics	ESC	**Optimal pressure**	3 bar
Flexible hoses lenght	450 mm	**Water production (l/min)**	8,3 l/min
Flexible hoses connection	3/8 "	**Ceramic disc cartridge type**	25 Ø
Maximum pressure	5 bar	**Tap hole diameter**	35 mm
Minimum pressure	0,5 bar		

Logistic Information

Product height (mm)	482 mm

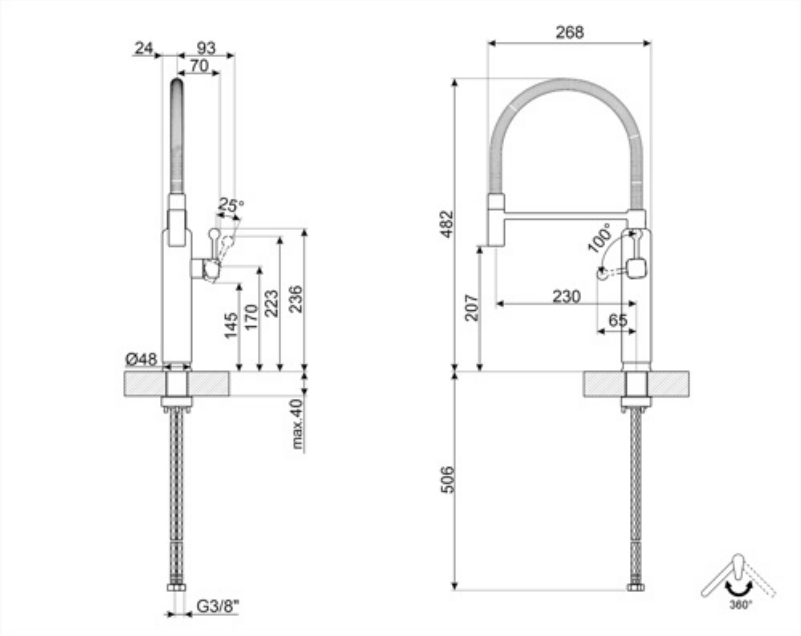
24
93
70
25°
145
170
223
236
Ø48
max.40
G3/8"
268
482
100°
207
230
65
506
360°

Alternative products

MDF50WH

Colour: White

MDF50SS

Colour: Chrome

MDF50BL

Colour: Black

MDF50RD

Colour: Red

MDF50ACM

Colour: Amber Clay

MDF50PG

Colour: Pastel green

MDF50SBM

Colour: Storm Blue

MDF50PB

Colour: Pastel blue

MDF50MLM

Colour: Moonlight

MDF50CR

Colour: Cream

Symbols glossary

ESC: with the ESC Energy Saving Cartridge system the control lever positioned in the middle dispenses only cold water, and not 50% of hot and 50% of c

The mobile hand shower of the Semi-Professional taps with high spout allows you to easily reach every point of the sink.

Swivel spout rotation 360°