# MF8CR

| | |
|---|---|
| **Product family** | Taps |
| **Material** | Brass |
| **Swivelling spout** | Yes |
| **Swivelling spout rotation** | 360 ° |



## Aesthetics

| | | | |
|---|---|---|---|
| **Aesthetic** | Universale | **Finishing** | Glossy |
| **Colour** | Chrome | **Jet type** | Single jet |
| **Spout type** | J spout | **Aerator** | Yes |
| **Tap type** | Single lever | **Flexible hoses number** | 2 |

## Technical Features

| | | | |
|---|---|---|---|
| **Flexible hoses lenght** | 300 mm | **Optimal pressure** | 3 bar |
| **Flexible hoses connection** | 3/8 " | **Water production (l/min)** | 14 l/min |
| **Maximum pressure** | 5 bar | **Ceramic disc cartridge type** | 35 Ø |
| **Minimum pressure** | 0,5 bar | **Tap hole diameter** | 35 mm |

## Logistic Information

| | |
|---|---|
| **Product height (mm)** | 292 mm |

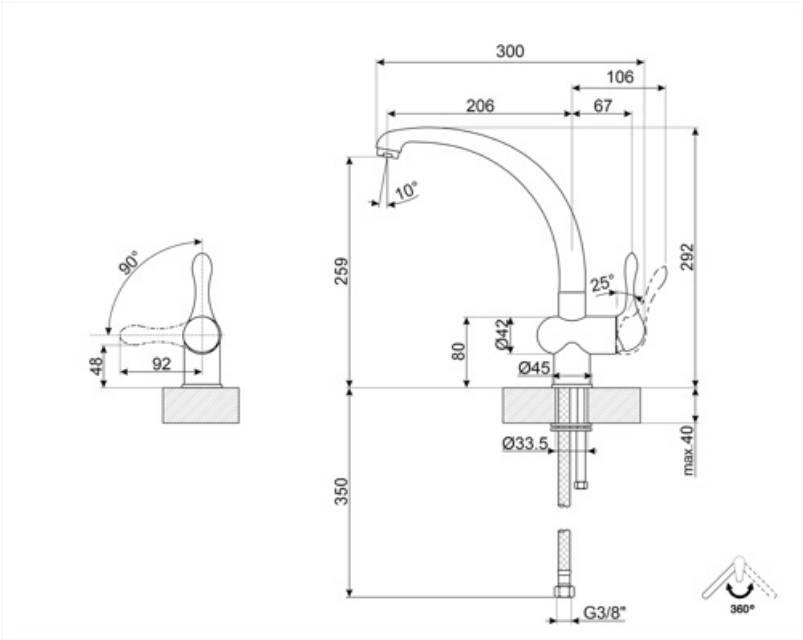
300
106
206
67
10°
90°
259
292
25°
48
92
80
Ø42
Ø45
Ø33.5
max.40
350
G3/8"
360°

## Symbols glossary




Swivel spout rotation 360°