# MFQ8-IS2

| | |
|---|---|
| **Product family** | Taps |
| **Material** | Brass |
| **Swivelling spout** | Yes |
| **Swivelling spout rotation** | 120 ° |



## Aesthetics

| | | | |
|---|---|---|---|
| **Aesthetic** | Universale | **Series** | Quadra |
| **Colour** | Nickel | **Aerator** | Yes |
| **Tap type** | Single lever | **Flexible hoses number** | 2 |
| **Finishing** | Brushed | | |

## Technical Features

| | | | |
|---|---|---|---|
| **Flexible hoses lenght** | 600 mm | **Optimal pressure** | 3 bar |
| **Flexible hoses connection** | 3/8 " | **Ceramic disc cartridge type** | 35 Ø |
| **Maximum pressure** | 5 bar | **Tap hole diameter** | 35 mm |
| **Minimum pressure** | 0,5 bar | | |

## Logistic Information

| | |
|---|---|
| **Product height (mm)** | 304 mm |

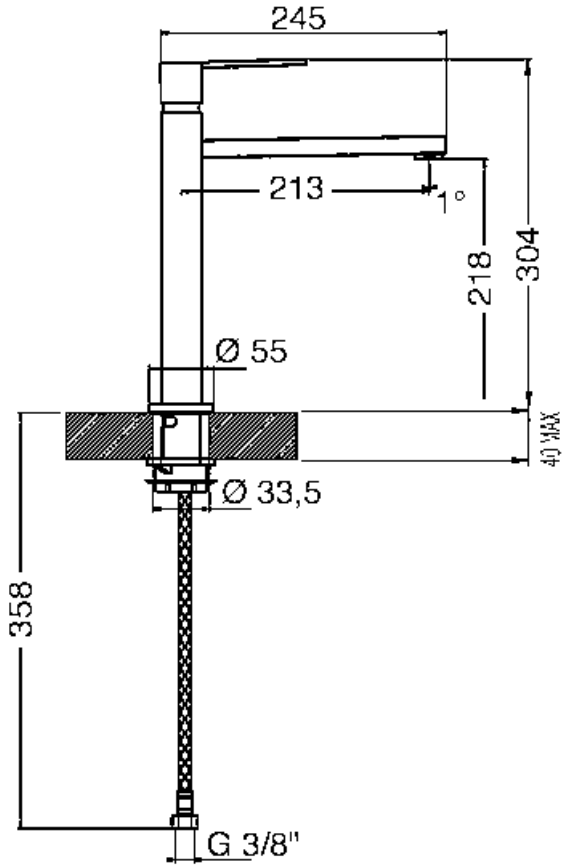
245
213
1°
304
218
Ø 55
40 MAX
Ø 33,5
358
G 3/8"

## Symbols glossary




Swivel spout rotation 120°