MI3MN

Product family	Taps
Material	Brass
Swivelling spout	Yes
Swivelling spout rotation	360 °



Aesthetics

Aesthetic	Universale	**Finishing**	Matt black
Colour	Black	**Jet type**	Single jet
Spout type	U spout	**Aerator**	Yes
Tap type	Single lever	**Flexible hoses number**	2

Technical Features

Characteristics	ESC	**Minimum pressure**	1 bar
Flexible hoses lenght	370 mm	**Optimal pressure**	3 bar
Flexible hoses connection	3/8 "	**Ceramic disc cartridge type**	35 Ø
Maximum pressure	5 bar	**Tap hole diameter**	35 mm

Logistic Information

Product height (mm)	301 mm

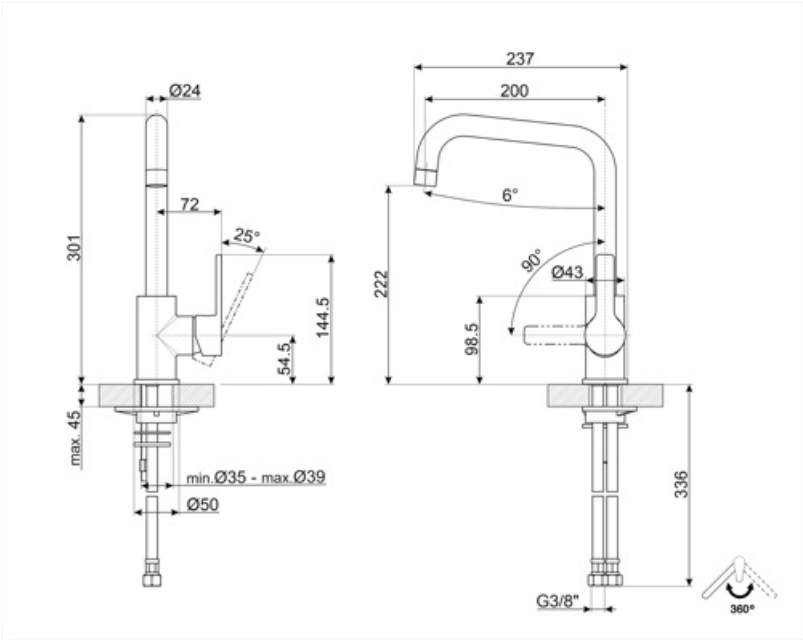
Ø24
72
25°
301
144.5
54.5
max. 45
min.Ø35 - max.Ø39
Ø50
237
200
6°
90°
Ø43
222
98.5
336
G3/8"
360°

Compatible Accessories



STABMIX

Tap stabiliser

Alternative products



MI3CR

Colour: Chrome

Symbols glossary



ESC: with the ESC Energy Saving Cartridge system the control lever positioned in the middle dispenses only cold water, and not 50% of hot and 50% of c



Swivel spout rotation 360°