MID1CR



Product family	Taps
Material	Brass
Swivelling spout	Yes
Swivelling spout rotation	360 °

Aesthetics

Aesthetic	Universale	**Handshower**	Extractable
Colour	Chrome	**Jet type**	Single jet
Spout type	L spout	**Aerator**	Yes
Tap type	Single lever	**Flexible hoses number**	2
Finishing	Glossy		

Technical Features

Characteristics	ESC, WSC	**Optimal pressure**	3 bar
Flexible hoses lenght	400 mm	**Water production (l/min)**	12 l/min
Flexible hoses connection	3/8 "	**Ceramic disc cartridge type**	35 Ø
Maximum pressure	5 bar	**Tap hole diameter**	35 mm
Minimum pressure	1 bar	**Non-return valve**	Yes

Logistic Information

Product height (mm)	325 mm

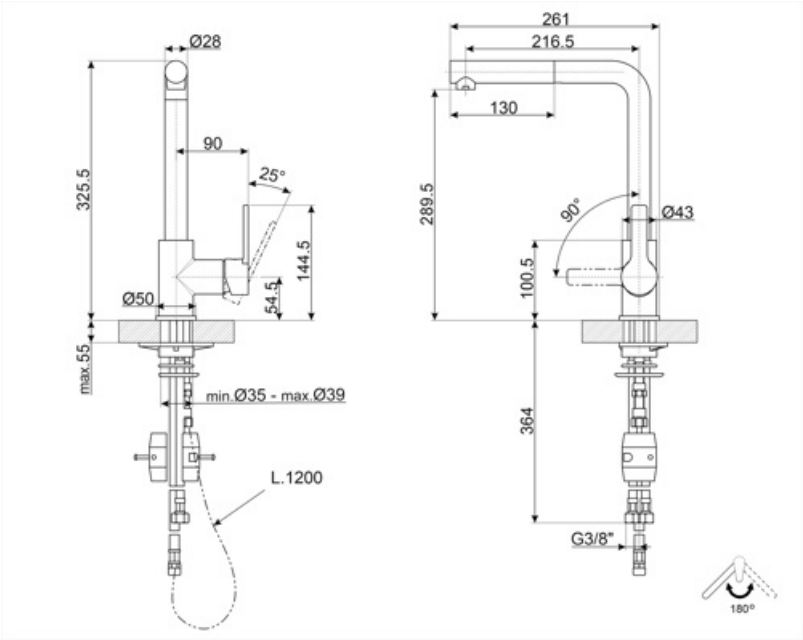
Ø28
325.5
90
25°
144.5
54.5
Ø50
max.55
min.Ø35 - max.Ø39
L.1200
261
216.5
130
289.5
90°
Ø43
100.5
364
G3/8"
180°

Compatible Accessories



STABMIX

Tap stabiliser

Alternative products



MID1MN

Colour: Black



MID1NS

Colour: Nickel

Symbols glossary



ESC: with the ESC Energy Saving Cartridge system the control lever positioned in the middle dispenses only cold water, and not 50% of hot and 50% of c



WSC: with the WSC Water Saving Cartridge the control lever stops halfway, causing 50% of the water (sufficient for normal cooking activities) to be di



Swivel spout rotation 360°



The extractable handshower allows to increase the range of action of the tap and it is extremely versatile, practical and comfortable.