MID1MN



Product familie	Kranen
Materiaal	Messing
Draaibare uitloop	Ja
Rotatie draaibare uitloop	360 °

Design

Design	Universeel	**Sproeier**	Extractable
Kleur	Zwart	**Jet type**	Double jets
Spout type	L spout	**Aerator**	Ja
Type kraan	Enkele hendel	**Aantal flexibele slangen**	2
Afwerking	Mat zwart		

Technische specificaties

Eigenschappen	ESC, WSC	**Optimale druk**	3 bar
Lengte flexibele slang	400 mm	**Type cartouche met keramische schijven**	35 Ø
Aansluiting flexibele slangen	3/8 "	**Diameter kraangat**	35 mm
Maximum druk	5 bar	**Non-return valve**	Ja
Minimum druk	1 bar		

Logistieke informatie

Hoogte product (mm)	325 mm

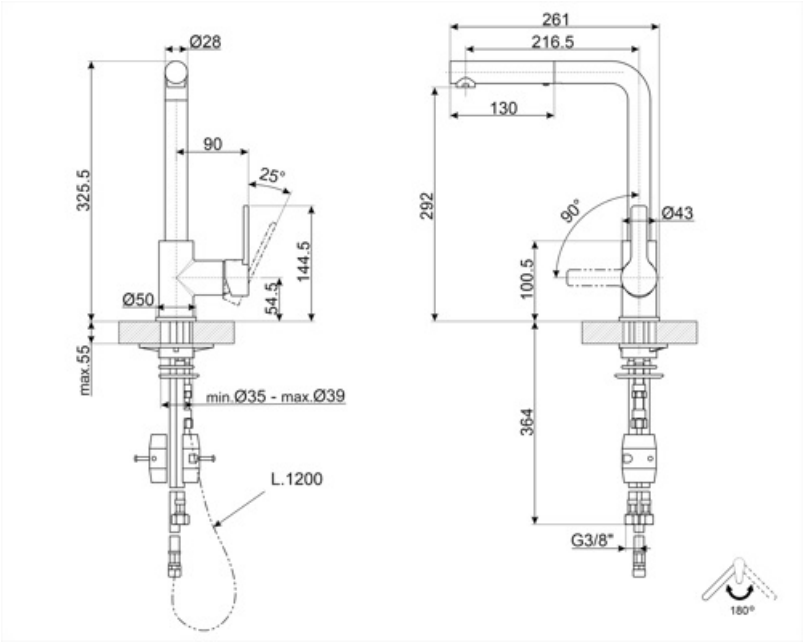
Ø28
325.5
90
25°
144.5
54.5
Ø50
max.55
min.Ø35 - max.Ø39
L.1200
261
216.5
130
292
90°
Ø43
100.5
364
G3/8"
180°

Compatible Accessories



STABMIX

Tap stabiliser

Alternative products



MID1CR

Kleur: Chroom



MID1NS

Kleur: Nickel

Symbols glossary



ESC: with the ESC Energy Saving Cartridge system the control lever positioned in the middle dispenses only cold water, and not 50% of hot and 50% of c



WSC: with the WSC Water Saving Cartridge the control lever stops halfway, causing 50% of the water (sufficient for normal cooking activities) to be di



Swivel spout rotation 360°



Double jet handshower. It is possible to simply switch between a standard stream mode and a spray mode.



The extractable handshower allows to increase the range of action of the tap and it is extremely versatile, practical and comfortable.