MID2MN

Product family	Taps
Material	Brass
Swivelling spout	Yes
Swivelling spout rotation	360 °



Aesthetics

Aesthetic	Universale	**Handshower**	Extractable
Colour	Black	**Jet type**	Single jet
Spout type	J spout	**Aerator**	Yes
Tap type	Single lever	**Flexible hoses number**	2
Finishing	Matt		

Technical Features

Characteristics	ESC, WSC	**Optimal pressure**	3 bar
Flexible hoses lenght	400 mm	**Ceramic disc cartridge type**	35 Ø
Flexible hoses connection	3/8 "	**Tap hole diameter**	35 mm
Maximum pressure	5 bar	**Non-return valve**	Yes
Minimum pressure	1 bar		

Logistic Information

Product height (mm)	448 mm

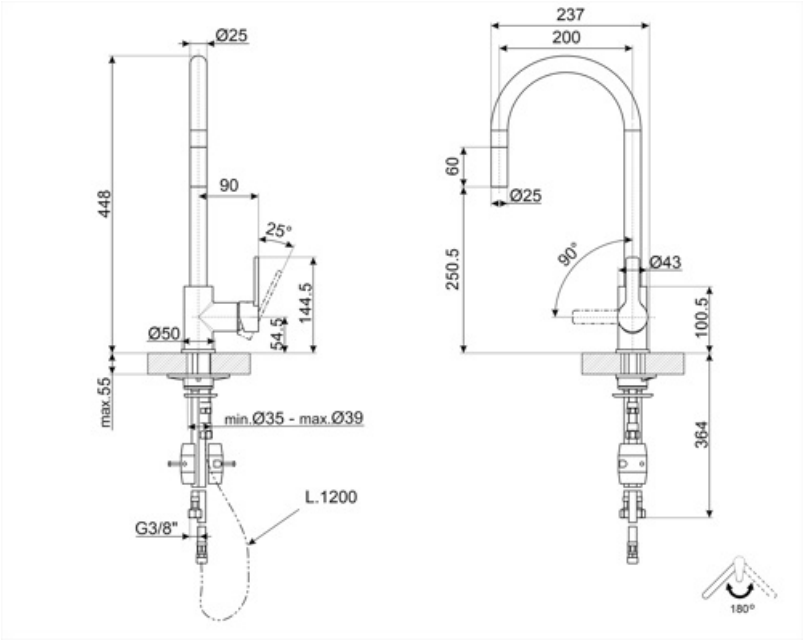
Ø25
448
90
25°
144.5
54.5
Ø50
max.55
min.Ø35 - max.Ø39
L.1200
G3/8"
237
200
60
Ø25
250.5
90°
Ø43
100.5
364
180°

Compatible Accessories



STABMIX

Tap stabiliser

Alternative products



MID2CR

Colour: Chrome

Symbols glossary



ESC: with the ESC Energy Saving Cartridge system the control lever positioned in the middle dispenses only cold water, and not 50% of hot and 50% of c



WSC: with the WSC Water Saving Cartridge the control lever stops halfway, causing 50% of the water (sufficient for normal cooking activities) to be di



Swivel spout rotation 360°



The extractable handshower allows to increase the range of action of the tap and it is extremely versatile, practical and comfortable.