MIDR70-2

Product family	Taps
Material	Brass
Swivelling spout	Yes
Swivelling spout rotation	180 °



Aesthetics

Aesthetic	Coloniale	**Handshower**	Mobile semi-professional
Colour	Brass	**Jet type**	Double jets
Spout type	Spring spout	**Aerator**	Yes
Tap type	Semi-professional single lever	**Flexible hoses number**	2
Finishing	Antique brass		

Technical Features

Characteristics	ESC, WSC	**Optimal pressure**	3 bar
Flexible hoses lenght	500 mm	**Water production (l/min)**	12 l/min
Flexible hoses connection	3/8 "	**Ceramic disc cartridge type**	35 Ø
Maximum pressure	5 bar	**Tap hole diameter**	35 mm
Minimum pressure	1 bar		

Logistic Information

Product height (mm)	550 mm

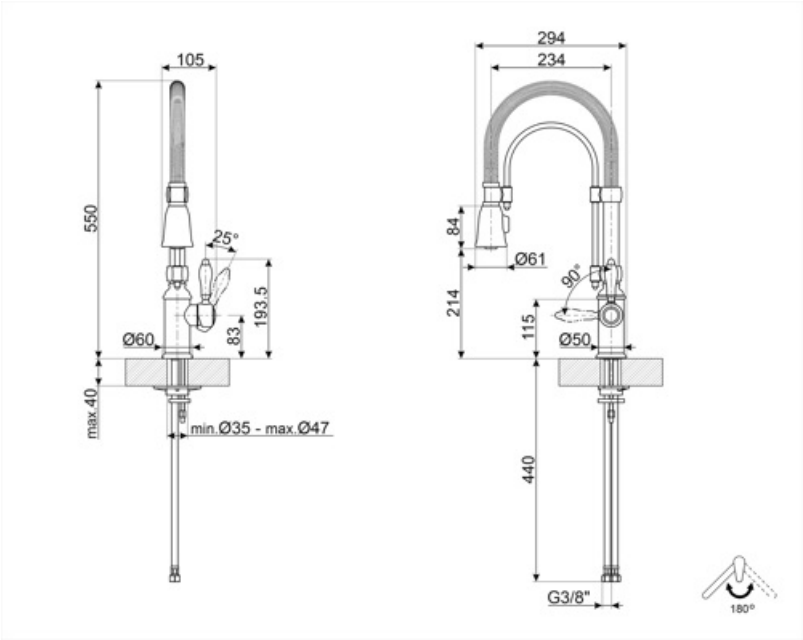
105
550
25°
193.5
83
Ø60
max.40
min.Ø35 - max.Ø47
294
234
84
Ø61
90°
214
115
Ø50
440
G3/8"
180°

Compatible Accessories



STABMIX

Tap stabiliser

Alternative products



MIDR7RA-2

Colour: Copper



MIDR7CR-2

Colour: Chrome

Symbols glossary



ESC: with the ESC Energy Saving Cartridge system the control lever positioned in the middle dispenses only cold water, and not 50% of hot and 50% of c



WSC: with the WSC Water Saving Cartridge the control lever stops halfway, causing 50% of the water (sufficient for normal cooking activities) to be di



Swivel spout rotation 180°



Double jet handshower. It is possible to simply switch between a standard stream mode and a spray mode.



The mobile hand shower of the Semi-Professional taps with high spout allows you to easily reach every point of the sink.