MIR80

Product family	Taps
Material	Brass
Swivelling spout	Yes
Swivelling spout rotation	360 °



Aesthetics

Aesthetic	Coloniale	**Finishing**	Antique brass
Colour	Brass	**Jet type**	Single jet
Spout type	L spout	**Aerator**	Yes
Tap type	Double lever	**Flexible hoses number**	2

Technical Features

Flexible hoses lenght	370 mm	**Optimal pressure**	3 bar
Flexible hoses connection	3/8 "	**Water production (l/min)**	12 l/min
Maximum pressure	5 bar	**Ceramic disc cartridge type**	Other Ø
Minimum pressure	1 bar	**Tap hole diameter**	35 mm

Logistic Information

Product height (mm)	260 mm

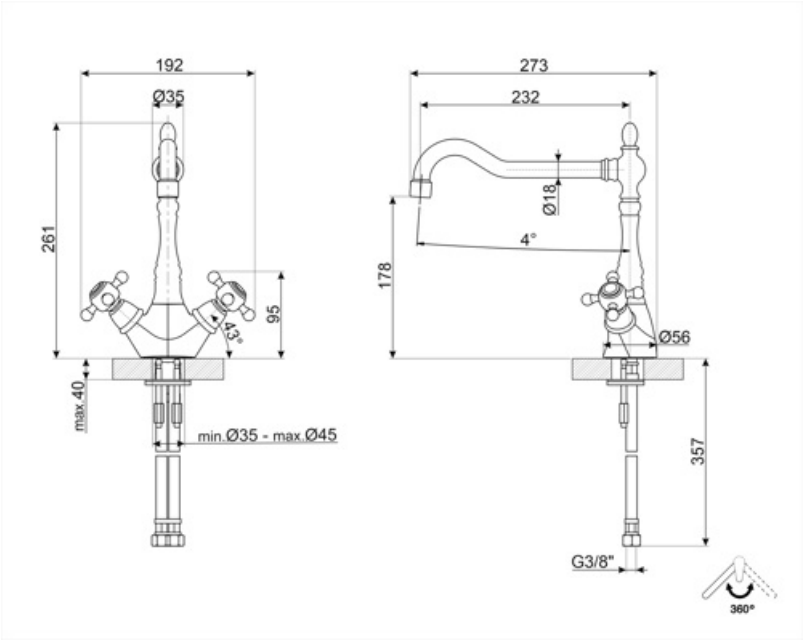
192
Ø35
261
95
43°
max.40
min.Ø35 - max.Ø45
273
232
Ø18
4°
178
Ø56
357
G3/8"
360°

Compatible Accessories



STABMIX

Tap stabiliser

Symbols glossary



Swivel spout rotation 360°