MP6322XK

Product Family	Microwave
Category	Built-in
Installation type	Built-in
Installation	Under cupboard
Power supply	Electric
Cooking Method	Microwave with grill
Control	Electronic



Aesthetics

Aesthetic	Classica	**Glass Type**	Eclipse
Colour	Stainless Steel	**Serigraphy colour**	Black
Finishing	Fingerproof	**Door**	With 2 horizontal strips
Material	Stainless steel	**Logo**	Embossed
Type of steel	Brushed		

Program / Functions

No. of functions	6	**Defrost by weight**	Yes
Full grill	Yes	**Microwave**	Yes
Pizza	Yes	**Microwave + grill**	Yes
Defrost by time	Yes		

Controls

Display / Clock	1 a LED	**No. of controls**	2
Type of control setting	Control knobs	**Control knobs**	Classic

Options

Timer	Electronic	**Showroom demo option**	Yes
Time-setting options	Start and stop		

End of cooking acoustic alarm	Yes	**Controls Lock / Child Safety**	Yes

Technical Features



Cavity material	Stainless steel	**Grill - power**	1250 W
No. of lights	1	**Total no. of door glasses**	2
Light type	Incandescent	**Safety Thermostat**	Yes
Light Power	20 W	**Cooling system**	Tangential
Ceramic base	Yes	**Microwave screen protection**	Yes
Light when door is opened	Yes	**Microwave stops when door is opened**	Yes
Grill type	Heating element	**Usable cavity space dimensions (HxWxD)**	220x350x280 mm
Tilting grill	Yes	**Microwave effective power**	850 W

Accessories included

Grid	1	**Other**	Cucina control knob kit

Performance / Energy Label



Usable volume	22 l	**Gross volume**	22 l

Electrical Connection

Plug	Not present	**Voltage (V)**	220 V
Nominal power	2500 W	**Frequency (Hz)**	60 Hz
Current	12,3 A	**Power supply cable length**	150 cm

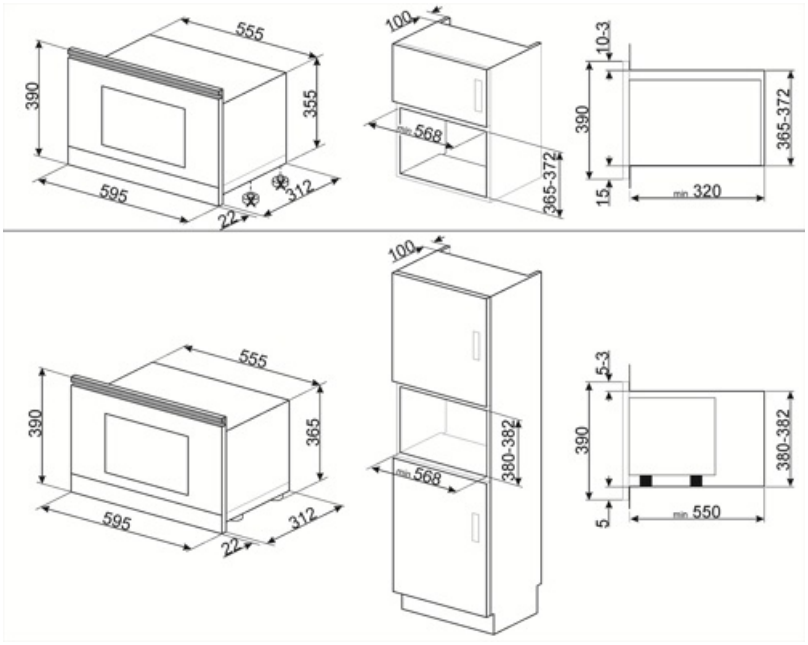
555
390
355
595
312
22
100
568
365-372
10-3
390
365-372
15
min 320
100
555
390
365
595
312
22
568
380-382
5-3
390
380-382
5
min 550

Symbols glossary



Surfaceplus ceramic base: Surfaceplus ceramic base for a microwave oven - no turntable required, and the whole surface can be used for cooking.



Microwave energy shortens cooking times dramatically and produces energy savings.



Defrost by weight: Automatic defrost function. You choose the type of food to defrost from the available categories (MEAT - FISH - BREAD - DESSERTS). After entering the weight of the food, the oven automatically defines the time required for proper defrosting.



Fingerprint proof stainless steel: Fingerprint proof stainless steel keeps stainless steel looking as good as new.



Microwave + grill element: The use of the grill results in a perfect browning of the surface of the food. The action of microwaves allows instead of cooking in a short time the internal part of the food.



Microwave: Penetrating straight into the food, microwaves cook very quickly and with considerable energy savings. Suitable for cooking without fat, they are also able to thaw and heat food without altering its original appearance and aroma. The microwave function can also be combined with conventional functions with all the resulting advantages. Ideal for all types of food.



The capacity indicates the amount of usable space in the oven cavity in litres.



Child lock: some models are fitted with a device to lock the programme/cycle so it cannot be accidentally changed.



Defrost by time: Manual defrost function. At the end of the set duration, the function stops.



Double glazed doors: Number of glazed doors.



Grill: Very intense heat coming only from above from a double heating element. The fan is not active. Provides excellent grilling and gratinating results. Used at the end of cooking, it gives a uniform browning to dishes.



Pizza microwave: This function cooks pizza quicker thanks to the microwaves. To optimize the final result, use the function combined with the Chef plate.



Tilting grill: the tilting grill can be easily unhooked to move the heating element and clean the roof of the appliance in one simple step.