MRMG4DCR



Product family	Taps
Material	Brass
Swivelling spout	Yes
Swivelling spout rotation	360 °

Aesthetics

Aesthetic	Universale	**Handshower**	Extractable
Colour	Chrome	**Jet type**	Single jet
Spout type	J spout	**Aerator**	Yes
Tap type	Single lever	**Flexible hoses number**	2
Finishing	Glossy		

Technical Features

Flexible hoses lenght	350 mm	**Water production (l/min)**	8,2 l/min
Flexible hoses connection	3/8 "	**Ceramic disc cartridge type**	35 Ø
Maximum pressure	5 bar	**Tap hole diameter**	35 mm
Minimum pressure	0,5 bar	**Non-return valve**	Yes
Optimal pressure	3 bar		

Logistic Information

Product height (mm)	410 mm

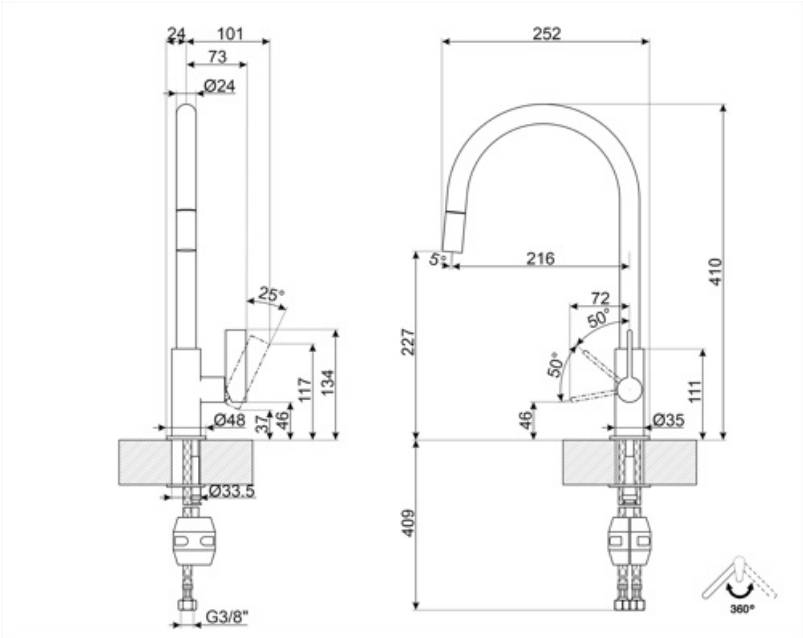
24
101
73
Ø24
25°
117
134
Ø48
37
46
Ø33.5
G3/8"
252
5°
216
72
50°
50°
227
46
111
410
Ø35
409
360°

Symbols glossary



Swivel spout rotation 360°



The extractable handshower allows to increase the range of action of the tap and it is extremely versatile, practical and comfortable.