OTR24XU

Product family	Microwave Oven
Category	Built-in
Installation type	Built-in
Power source	AC
Cooking Method	Microwave
Oven controls	Electronic



Aesthetic

Color	Stainless Steel/Black	**Silkscreen color**	White
Material	Stainless steel and glass	**Logo**	Silkscreened

Program / Functions

Number of functions	4	**Microwave**	Yes
Defrost by time	Yes	**Microwave special functions**	Sensor cook
Defrost by weight	Yes		

Controls

Display	1 LED	**Opening**	Side opening
Controls	Touch controls		

Options

Timer	Electronic	**Turntable stop option**	Yes
End-of-cooking acoustic alarm	Yes	**Quick-start option**	Yes
Child safety lock	Yes		

Technical Features

Cavity material	Galvanized steel	**Total no. of door glasses**	1
No. of lights	1	**Security Thermostat**	Yes
Lighting	LED	**Microwave door protection screen**	Yes
Turntable	Yes	**Microwave stops when door is opened**	Yes
Turntable dimensions	13 9/16 "	**Inner cavity dimensions (HxWxD)**	272x388x391 mm
Light on when door is open	Yes	**Microwave effective power**	1000 W

Accessories Included

Glass tray	Glass tray

Performance / Energy Label

Volume	38 cu. ft.

Electrical Connection

Current	15 A	**Frequency**	60 Hz
Voltage	120 V	**Power cord length**	39 3/8 "

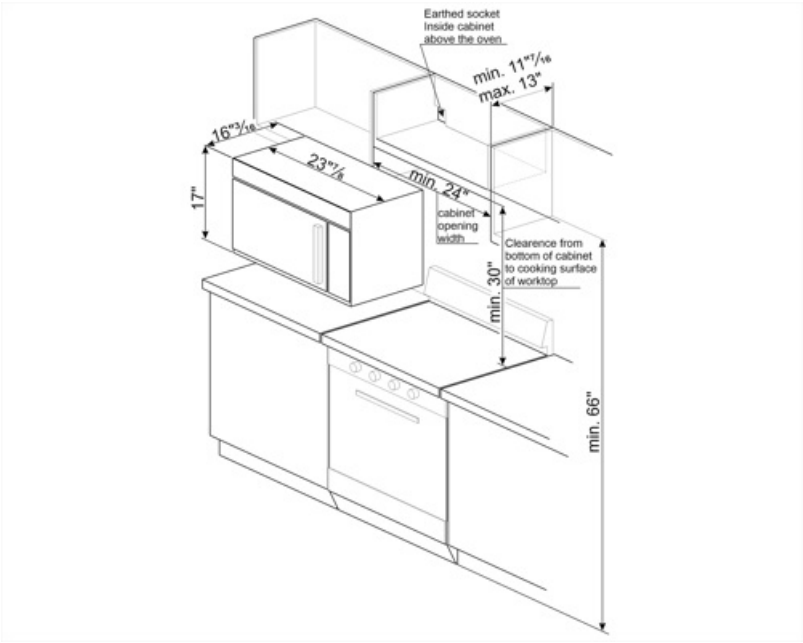

Symbols glossary



Child lock: some models are fitted with a device to lock the programme/cycle so it cannot be accidentally changed.



Defrost by time: with this function the time of thawing of foods are determined automatically.



Microwave: Penetrating straight into the food, microwaves cook very quickly and with considerable energy savings. Suitable for cooking without fat, they are also able to thaw and heat food without altering its original appearance and aroma. The microwave function can also be combined with conventional functions with all the resulting advantages. Ideal for all types of food.



Touch controls: Easy to use touch controls allow the appliance to be programmed at the touch of a button.



Microwave energy shortens cooking times dramatically and produces energy savings.



Defrost by weight: With this function the defrosting time is determined



Side lights: Two opposing side lights increase visibility inside the oven.