OTR316XU

Product family	Microwave Oven
Category	Built-in
Installation type	Built-in
Power source	AC
Cooking Method	Microwave
Oven controls	Electronic



Program / Functions

Number of functions	7

Controls

Display	1 LED	**Opening**	Side opening
Controls	Touch controls		

Options

Child safety lock	Yes

Technical Features

No. of lights	2	**Turntable dimensions**	13 9/16 "
Lighting	Halogen	**Microwave effective power**	1000 W
Turntable	Yes		

Electrical Connection

Current	15 A	**Frequency**	60 Hz
Voltage	120 V		

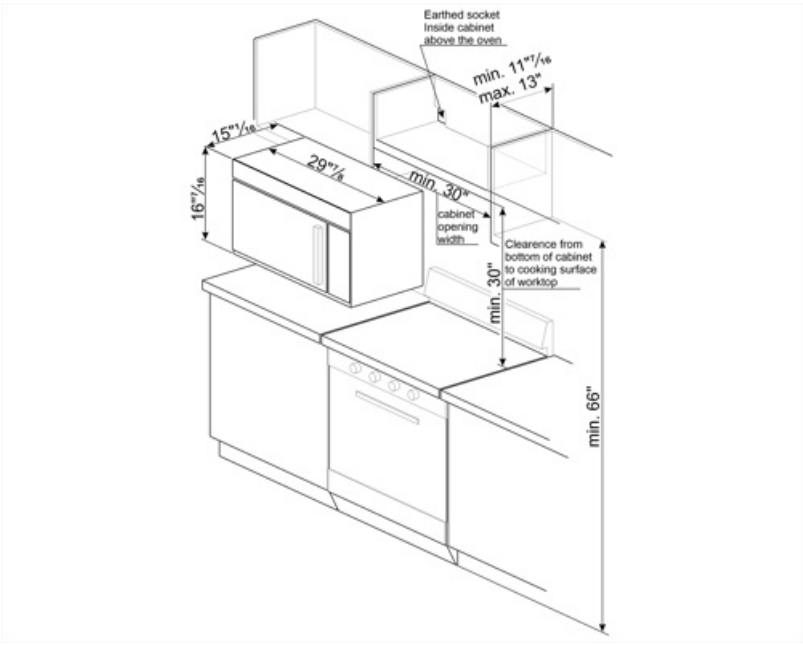
Earthed socket
Inside cabinet
above the oven
min. 11"7/16
max. 13"
15"1/16
29"7/8
min. 30"
16"7/16
cabinet
opening
width
Clearence from
bottom of cabinet
to cooking surface
of worktop
min. 30"
min. 66"

Symbols glossary



Child lock: some models are fitted with a device to lock the programme/cycle so it cannot be accidentally changed.



Touch controls: Easy to use touch controls allow the appliance to be programmed at the touch of a button.



Microwave energy shortens cooking times dramatically and produces energy savings.