PGFU36X

Product family	Cooktop
Installation	Ultra-low profile
Dimensions	36"
Power supply	Mixed
Type	Gas
EAN code	8017709210878



Aesthetic

Aesthetics	Classic
Color	Stainless Steel
Finishing	Satin
Material	Stainless steel
Stainless steel type	Brushed
Grates	Cast iron
Burners	Standard
Burners material	Aluminum
Control setting type	Control knobs
Controls position	Lateral
No. of controls	5
Controls color	Stainless steel effect
Logo	Silkscreened

Program / Functions

Burners	5
Cooking zones	5

Options

Standard cut-out	492x850 mm

Technical Features

UR

Front-left - Gas - Semi-rapid - 1.80 kW - 6000 BTU - Double booster BTU
Rear-left - Gas - Semi-rapid - 1.80 kW - 6000 BTU - Double booster BTU
Center - Gas - Ultra-rapid - 4.00 kW - 13500 BTU - Double booster BTU
Rear-right - Gas - Semi-rapid - 1.80 kW - 6000 BTU - Double booster BTU
Front-right - Gas - AUX - 1.05 kW - 3500 BTU - Double booster BTU
Double booster BTU

Gas safety valves	Yes	**Automatic Ignition**	Yes

Accessories Included

Cast iron wok support	1

Electrical Connection

Nominal power	1 W	**Frequency**	50/60 Hz
Voltage	100-120 V	**Power cord length**	47 1/4 "
Electric cable type	Single phase		

Gas Connection

Gas Type	G20 Natural gas	**Other gas nozzles included**	G30 LPG liquid gas
Gas connection	Cylindric	**Gas nominal rating**	9500 W

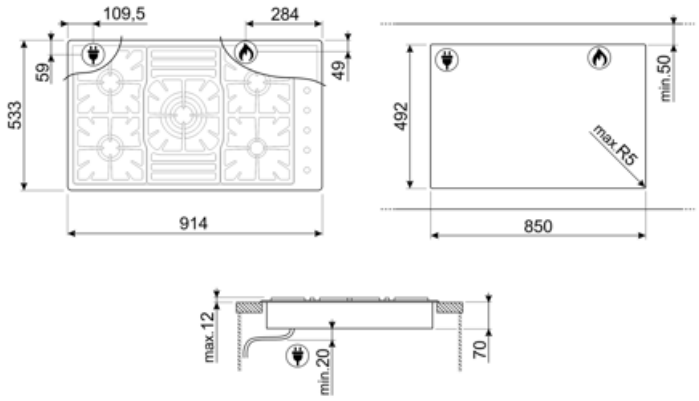

Compatible Accessories

6MP1PGF

6 Linea knobs for PGF hobs



GRM

Gas hobs moka support



GRW

Wok support



WOKGHU

Cast-Iron WOK Support



Symbols glossary



Ultra-low profile: Installation of product with flat edge - height of 1 mm.



Heavy duty cast iron pan stands: for maximum stability and strength.



Ultra rapid burners: Powerful ultra rapid burners offer up to 5kw of power.



Knobs control