PL292DN



Product Family	Dishwashers
Width	60 cm
Commercial height	82 cm
Installation	Partially-integrated built-in
Kitchen panel	Not supplied
N° baskets	2
Motor	Inverter 2.0
EAN code	8017709307080

Programmes

No. of programmes	5	**Mix**	Yes
Washing temperatures	50, 65, 70 °C	**Intense**	Yes
Soak	Yes	**Daily 1/2 load**	Yes
ECO	Yes		

Options

Delay timer option	3-6-9 hours, with automatic soak	**Extra dry option**	Yes

Baskets

Basket colour	Grey	**Largest loadable dish in upper basket**	25,0 cm
Basket components colour	Grey	**Lower Basket**	With 2 foldable racks
Handle	In plastic on upper and lower basket	**Lower basket with anti-drip inserts**	Yes
Upper Basket	With central fixed racks	**Largest loadable dish in lower basket**	30,0 cm
Glass holder	Yes	**Colour Inner Components**	Green
Height adjustment of the upper basket	On three levels	**Cutlery basket**	Yes

Technical Features



Width (mm)	598 mm
Depth (mm)	570 mm
Product Height (mm)	818 mm
Controls	Electronic
Programme graphics	Symbols
On/off indicator	Yes
Salt light indicator	Light
Rinse aid indicator	Light
End of cycle indicator	Acoustic signal
Auto switch-off	Yes
Washing system	Standard
Third spray arm	Single
Water softener	With electronic setting
Flood protection system	Total Acquastop
Water supply	Single; cold/hot water max. 60°C - energysave with hot water up to 35%
Max water hardness	100°fH;58°dH
Drying system	Natural condenser drying, with Dry Assist + automatic door opening system at the end of the cycle
Steam protection	In plastic
Tank material	Stainless steel
Filter	Stainless steel
Concealed heating element	Yes
Hinges	Self balancing with fixed hinges
Min. and max plinth height	100 - 215 mm
Adjustable feet	7cm, from 820 to 890 mm
Depth of dishwasher with open door (mm)	1146 mm
Back feet adjustable from front	Yes
Top cover	In plastic

Performance / Energy Label



Energy Efficiency Class (Washing cycle)	D
Energy consumption [per 100 cycles, based on the eco programme]	84 kWh
Rated capacity (ps)	13
Water consumption [per cycle]	12.0 litres
Programme duration	4:10 h:min
Airborne acoustical noise emissions (spinning phase)	49 dB(A) re 1 pW
Airborne acoustical noise emission class	C
Energy efficiency Index (EEI) (Washing cycle)	49.9

Electrical Connection

Connected power	1800 W
Current	10 A
Voltage	220-240 V
Frequency (Hz)	50 Hz
Type of connection	Single-phase
Power supply cable length	140 cm
Plug	(F;E) Schuko

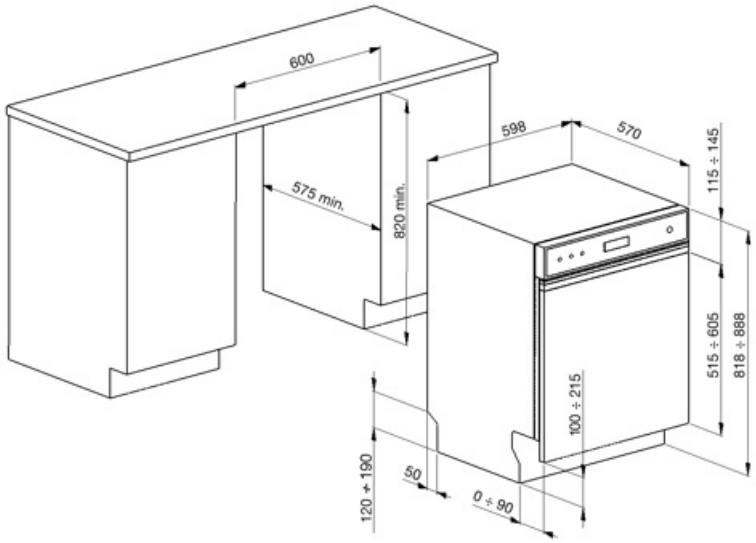
600
575 min.
820 min.
598
570
115 ÷ 145
515 ÷ 605
818 ÷ 888
100 ÷ 215
120 ÷ 190
50
0 ÷ 90

Compatible Accessories

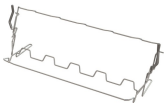

KITGH

Kit glass holder. It has to be fitted on the first basket but only if there are foldable racks



KITPL60FABN

Toekick Kit in Black colour with adjustable height. Can be fitted over all the fully integrated and underbench models with Fixed Fulcrum. Can be installed also on the models with variable fulcrum or flexifit hinges.



KITPLV2

Kit extension for dishwasher and washing machine: length mt. 2

KITPL60FABB

Toekick Kit in White colour with adjustable height. Can be fitted over all the fully integrated and underbench models with Fixed Fulcrum. Can be installed also on the models with variable fulcrum or flexifit hinges.



KITPL60FABX

Toekick Kit in Stainless Steel with adjustable height. Can be fitted over all the fully integrated and underbench models with Fixed Fulcrum. Can be installed also on the models with variable fulcrum or flexifit hinges.

Alternative products



PL292DX

Colour: Stainless steel



PL292DB

Colour: White

Symbols glossary



Anti-drip: Some models of dishwashers are equipped with special polymer nozzles anti-drip, that improve the process of drying.



COMM_HEIGHT_82_72dpi



Noise Level: Excellent insulation and special devices keep noise to a minimum.



Eco: Eco, this economic wash programme uses a low amount of water and energy in order to provide the most environmentally friendly cleaning option.



Soak programme: The soak programme provides a rinse to prevent dirt from drying.



The symbols show the number of plate settings of the dishwasher.



System WaterSave ensures the best washing results with minimal water consumption depending on the model of dishwasher.



The work aimed at continuous improvement has allowed the creation of the second generation of the Inverter motor 2.0, characterised by greater efficiency and durability over time, which allows very high performance and a lower energy consumption and noise level.



Energy efficiency class D



Delay Timer: The delay timer can postpone the start of the program by up to 24 hours.



1/2 load: This program is designed for washing dishes not heavily soiled with partial load of the dishwasher.



Normal programme: The normal programme is suitable for normal degrees of dirt for everyday use.



Ultraclean: The Ultraclean option performs a final rinse at a high temperature of 70°c eliminating virtually all bacteria.



Total Acquastop: In addition to the partial Acquastop protection present in all Smeg dishwashers, some models have an electronic device fitted to the water intake hose, which monitors water levels in the machine, detects leaks in the hose and switches off the water supply immediately when necessary.



EXTRA DRY This option adds a hot rinse cycle that ensures improved drying.