PL364CN



Product Family	Dishwashers
Width	60 cm
Commercial height	82 cm
Installation	Partially-integrated built-in
Kitchen panel	Not supplied
N° baskets	3, FlexiDuo
EAN code	8017709307127

Programmes

	27'	45°	60 min	ECO 50°	AUTO 45°-65°	65°		70°		75°

No. of programmes	10+1	**Auto sensor 45-65**	Yes
Washing temperatures	38, 45, 50, 55, 65, 70, 75 °C	**Mix**	Yes
Soak	Yes	**Quiet (-2 dB)**	Yes
Express 27'	Yes	**Intense**	Yes
Crystal	Yes	**Self clean**	Yes
Full express - 60 minutes	Yes	**Hygiene 99,9%**	Yes
ECO	Yes		

Options

Dry Assist+ option	Yes	**1/2 load FlexiZone option (varied distribution)**	Yes
Delay timer option	Up to 24 hours, with automatic soak	**Special programs option**	Yes

Baskets

Basket colour	Grey	**Largest loadable dish in upper basket**	19,0 cm
Basket components colour	Grey	**Lower Basket**	With 2 foldable racks

Handle	In plastic on upper and lower basket
Upper Basket	With central fixed racks
Glass holder	Yes
Height adjustment of the upper basket	On three levels
Lower basket with anti-drip inserts	Yes
Largest loadable dish in lower basket	30,0 cm
Colour Inner Components	Green

Technical Features



Width (mm)	598 mm
Depth (mm)	570 mm
Display type	3 digit
Product Height (mm)	818 mm
Controls	Electronic
Display	Delayed start, Programme time indicator, Time to end indication
Programme graphics	Symbols
On/off indicator	Yes
Salt light indicator	Light
Rinse aid indicator	Light
Progress indicator	Yes
End of cycle indicator	Acoustic signal
Auto switch-off	Yes
Washing system	Orbital
Third spray arm	Single
Water softener	With electronic setting
Turbidity sensor Aquatest	Yes
Flood protection system	Total Acquastop
Water supply	Single; cold/hot water max. 60°C - energysave with hot water up to 35%
Max water hardness	100°fH;58°dH
Drying system	Natural condenser drying, with Dry Assist + automatic door opening system at the end of the cycle
Steam protection	In plastic
Tank material	Stainless steel
Filter	Stainless steel
Concealed heating element	Yes
Hinges	Self balancing with fixed hinges
Min. and max plinth height	100 - 215 mm
Adjustable feet	7cm, from 820 to 890 mm
Depth of dishwasher with open door (mm)	1146 mm
Back feet adjustable from front	Yes
Top cover	In plastic

Performance / Energy Label

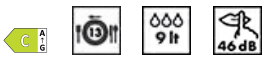

Energy Efficiency Class (Washing cycle)	C
Energy consumption [per 100 cycles, based on the eco programme]	73 kWh
Rated capacity (ps)	13
Water consumption [per cycle]	9,0 litres
Programme duration	4:25 h:min
Airborne acoustical noise emissions (spinning phase)	46 dB(A) re 1 pW
Airborne acoustical noise emission class	C
Energy efficiency Index (EEI) (Washing cycle)	43,8

Electrical Connection

Connected power	1800 W	**Type of connection**	Single-phase
Current	10 A	**Power supply cable length**	140 cm
Voltage	220-240 V		
Frequency (Hz)	50 Hz	**Plug**	(F;E) Schuko

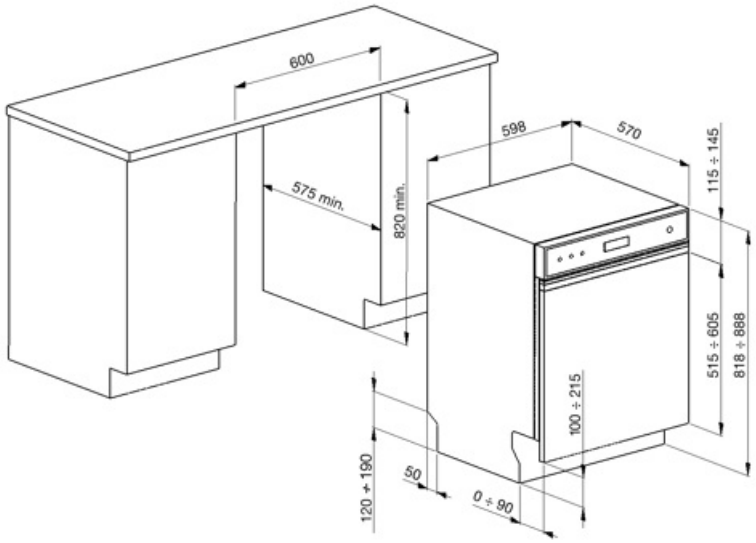

Compatible Accessories

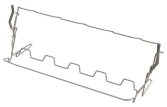

KITGH

Kit glass holder. It has to be fitted on the first basket but only if there are foldable racks



KITPL60FABN

Toekick Kit in Black colour with adjustable height. Can be fitted over all the fully integrated and underbench models with Fixed Fulcrum. Can be installed also on the models with variable fulcrum or flexifit hinges.



KITPLV2

Kit extension for dishwasher and washing machine: length mt. 2

KITPL60FABB

Toekick Kit in White colour with adjustable height. Can be fitted over all the fully integrated and underbench models with Fixed Fulcrum. Can be installed also on the models with variable fulcrum or flexifit hinges.



KITPL60FABX

Toekick Kit in Stainless Steel with adjustable height. Can be fitted over all the fully integrated and underbench models with Fixed Fulcrum. Can be installed also on the models with variable fulcrum or flexifit hinges.

Alternative products



PL364CX

Colour: Stainless steel

Symbols glossary



Aquatest measures the clarity of the water during an auto program, and automatically ensures the minimum consumption of water and energy.



COMM_HEIGHT_82_72dpi



FlexiDuo: The FlexiDuo 3rd cutlery basket allows you to arrange cutlery or small cups, ladles, or bulky utensils however you like: it consists of two separate and moveable modules.



Noise Level: Excellent insulation and special devices keep noise to a minimum.



Auto 45°- 65°: The auto programme regulates the length of a cycle depending on the need for a pre-wash and the number of rinses required.



Eco: Eco, this economic wash programme uses a low amount of water and energy in order to provide the most environmentally friendly cleaning option.



Soak programme: The soak programme provides a rinse to prevent dirt from drying.



Ultraclean: The Ultraclean option performs a final rinse at a high temperature of 70°c eliminating virtually all bacteria.



Total Acquastop: In addition to the partial Acquastop protection present in all Smeg dishwashers, some models have an electronic device fitted to the water intake hose, which monitors water levels in the machine, detects leaks in the hose and switches off the water supply immediately when necessary.



Quick wash cycle for normally soiled mixed loads such as dishes and pans, even with dried-on residues. Dishes are washed and dried in 60 minutes.



SILENT: Wash cycle suitable for normally soiled dishes, even with dried-on residues. Ensures maximum noise reduction and is therefore ideal if you wish to run it during the night.



The Dry Assist + option, in addition to saving energy, ensures perfect drying of the dishes by opening the door automatically at the end of the wash c



Anti-drip: Some models of dishwashers are equipped with special polymer nozzles anti-drip, that improve the process of drying.



Delay Timer: The delay timer can postpone the start of the program by up to 24 hours.



FlexiZone: The ½ load flexizone allows you to wash a reduced load saving energy, water and time and there are no restrictions on where the items are placed.



Orbital wash system distributes water evenly throughout the 60cm dishwasher cavity, directing water with precision to ensure an excellent wash.



Crystals: The Crystals programme is dedicated to delicate dishes such as glasses and china.



Normal programme: The normal programme is suitable for normal degrees of dirt for everyday use.



Rapid 27 Mins: The rapid 27 mins quick program takes just 27 minutes to wash a load.



The symbols show the number of plate settings of the dishwasher.



System WaterSave ensures the best washing results with minimal water consumption depending on the model of dishwasher.



Dishwasher cleaning cycle. The cycle should be started with the machine empty, without dishes. It is recommended to run the program every 2-3 months, using special dishwasher detergents.



Allows you to enable additional programs when selected together with any wash cycle.



Energy efficiency class C



HYGIENE 99.9% High-temperature washing programme. The 75° rinse guarantees the removal of 99.9% of germs and bacteria, making it ideal for sanitising



The work aimed at continuous improvement has allowed the creation of the second generation of the Inverter motor 2.0, characterised by greater efficiency and durability over time, which allows very high performance and a lower energy consumption and noise level.