PX175

Product Family	Hob
Built-in type	Traditional
Dimensions	70/75 cm
Power supply	Gas
Type	Gas
EAN code	8017709247423



Aesthetics

Aesthetic	Linea
Serie	New
Colour	Stainless Steel
Finishing	Satin
Material	Stainless Steel
Type of steel	Brushed
Pan stands	Cast iron
Burners	Smeg Contemporary
Burners Material	Alluminium
Type of control setting	Control knobs
Control knob position	Front
No. of controls	5
Controls colour	Steel effect
Logo	Silk screen
Serigraphy colour	Black

Program / Functions

No. of gas cook zones	5
Total no. of cook zones	5

Options

Worktop Cut-Out	478-482x555-560 mm

Technical Features

UR

Front-left - Gas - AUX - 1.10 kW
Rear-left - Gas - Rapid - 2.60 kW
Central - Gas - UR - 4.00 kW
Rear-right - Gas - Semi Rapid - 1.80 kW
Front-right - Gas - Semi Rapid - 1.80 kW

Gas safety valves	Yes	**Automatic Ignition**	Yes

Electrical Connection

Electrical connection rating (W)	1 W	**Frequency (Hz)**	50/60 Hz
Voltage (V)	220-240 V	**Power supply cable length**	120 cm
Type of electric cable installed	Yes, Single phase	**Plug**	Not present

Gas Connection

Gas Type	G20 Natural gas	**Other gas connections provided**	Conical
Gas connection	Cilindrical		
Other gas nozzles included	G30 GPL Liquid gas	**Gas connection rating (W)**	11300 W

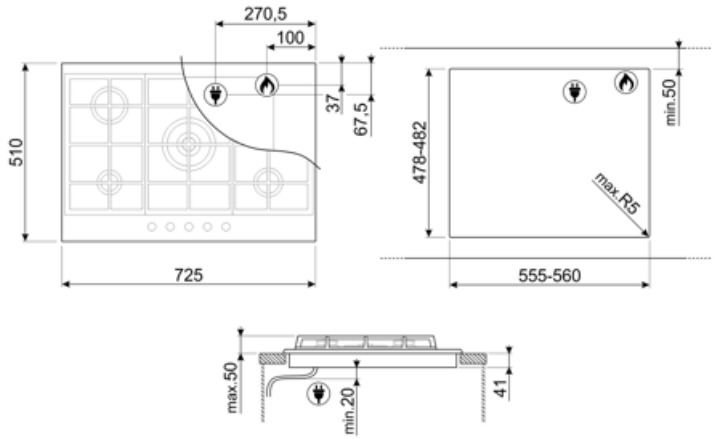

Compatible Accessories



GRW

Wok support



WOKGHU

Cast iron WOK Support

Symbols glossary



Standard installation: Traditional installation in tabletop, suitable for any kitchen sets.



Heavy duty cast iron pan stands: for maximum stability and strength.



Knobs control



CUT_OUT_STANDARD_72dpi



Ultra rapid burners: Powerful ultra rapid burners offer up to 5kw of power.