PX375

Product Family	Hob
Built-in	Traditional
Dimensions	70/75 cm
Power supply	Gas
Type	Gas
EAN code	8017709252090

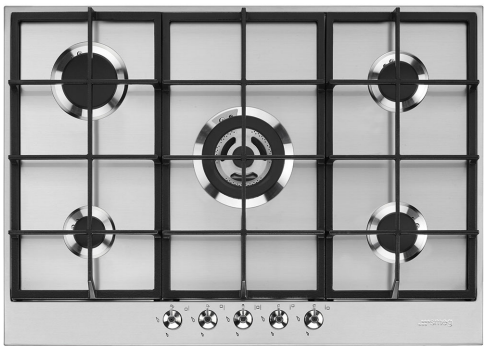

Aesthetics

Aesthetics	Classic
Series	New
Colour	Stainless steel
Finishing	Brushed
Material	Stainless Steel
Type of steel	Brushed
Pan stands	Cast iron
Burners	Smeg Contemporary
Burner Material	Aluminium
Type of control setting	Control knobs
Control knobs position	Front
No. of controls	5
Controls colour	Steel effect
Logo	Silk screen
Serigraphy colour	Black

Program / Functions

No. of gas cook zones	5
Total no. of cook zones	5

Options

Standard cut out	478-482x555-560 mm

Technical Features

UR

Front left - Gas - AUX - 1.10 kW
Rear left - Gas - Rapid - 2.60 kW
Central - Gas - UR - 4.00 kW
Rear right - Gas - Semi Rapid - 1.80 kW
Front right - Gas - Semi Rapid - 1.80 kW

Gas safety valves	Yes	**Automatic Ignition**	Yes

Electrical Connection

Nominal power (W)	1 W	**Frequency (Hz)**	50/60 Hz
Voltage (V)	220-240 V	**Power supply cable length**	120 cm
Type of electric cable	Single phase	**Plug**	No

Gas Connection

Gas Type	G20 Natural gas	**Other gas connections provided**	Conical
Gas connection	Cilindrical	**Gas connection rating (W)**	11300 W
Other gas nozzles included	G30 GPL Liquid gas		

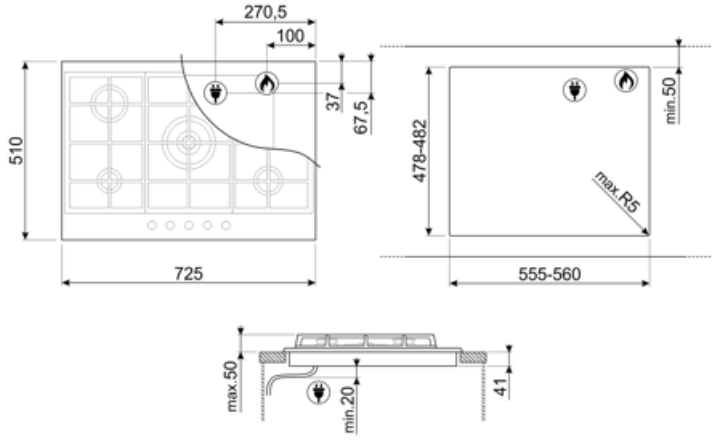

Compatible Accessories



GRW

Wok support



WOKGHU

Cast-Iron WOK Support

Alternative products

PX375MB



Colour: Matte Black

Symbols glossary



Standard installation: Traditional installation in tabletop, suitable for any kitchen sets



CUT_OUT_STANDARD_72dpi



Knobs control



Heavy duty cast iron pan stands: for maximum stability and strength.



Ultra rapid burners: Powerful ultra rapid burners offer up to 5kw of power.