# RBMU30R



| | |
|---|---|
| **Product Family** | Refrigerator |
| **Installation** | Built-in |
| **Category** | Bottom Mount |
| **Built-in niche** | >200 |
| **Sistema Total No - Frost** | Total |
| **Cooling type** | Total No Frost - Double Cooling system |
| **Defrost** | Automatic |
| **Hinge type** | Door on door |
| **Kitchen panel** | Not supplied |
| **Hinge position** | Right |
| **EAN code** | 8017709332709 |

## Aesthetics

| | | | |
|---|---|---|---|
| **Aesthetic** | Universale | **Drawers profile color** | Silver |
| **Logo colour** | Silver | **Color of glass shelf profile** | Silver |
| **Side material** | Steel | **Display** | TFT |
| **Logo** | Silk screen | **Display porition** | Interno (sul Top) |
| **Door shelves profile color** | Silver | **Water Filter** | Yes |

## Refrigerator compartment features

| | | | |
|---|---|---|---|
| **Number of compartments** | 2 | **Crisper Cover** | Yes |
| **Compartment types** | Low temperature compartment, Fruit and vegetable compartment | **Type of crisper/vegetable drawers cover** | Glass |
| **No. of adjustable shelves** | 3 | **Low temperature compartment** | Yes |
| **Number of fruit and vegetables drawers** | 1 | **Internal light in fridge** | Yes |
| **Shelves material** | Glass | **Type of internal light (fridge)** | LED |
| **Type of crisper/vegetable drawers cover** | On sliding rails | | |

## Refrigerator Inner Door

| | | | |
|---|---|---|---|
| **Number of adjustable door shelves** | 3 | **Bottle shelves with wire support** | Yes |

| | |
|---|---|
| **Adjustable door shelves with wire support** | Yes |

## Other Refrigerator features



| | |
|---|---|
| **MultiFlow** | Yes |

## Freezer compartment features

| | | | |
|---|---|---|---|
| **Number of drawers** | 1 | **Internal light in freezer** | Yes |
| **No. of lights freezer compartment** | 2 | **Type of internal light (freezer)** | LED |

## Other Freezer features

| | | | |
|---|---|---|---|
| **Ice maker** | Automatic | **Ice shape** | Cubes |
| **Ice Maker Location** | Internal | **Ice tray shelf** | Yes |
| **Daily ice production** | 1.5 kg | | |

## Other technical features



| | |
|---|---|
| **Functions display** | Holiday, Fast cooling, Temperature alarm, Demo Mode, Sabbath |
| **MultiZone** | Yes |
| **Water network connection** | Yes |
| **Power on lamp** | Yes |
| **Door open alarm** | Yes |
| **Temperature Alarm** | Yes |
| **Type of temperature control** | Electronic |
| **No. of compressors** | 2 |
| **Refrigerant gas type** | R600a |
| **Type of compressor** | Inverter |
| **Refrigerant Quantity (gr)** | 3.7 oz |
| **Foam agent** | HFO |

## Performance / Energy Label - Reg. 2019

| | | | |
|---|---|---|---|
| **Annual energy consumption** | 502 kWh/year | **Sum of the volumes of the chill compartment(s) and the unfrozen compartment(s)** | 11.8 cu. ft. |
| **Total net volume** | 15.5 cu. ft. | **Total gross volume** | 16.3 cu. ft. |
| | | **Climate class** | SN, T |

| | |
|---|---|
| **Sum of the volumes of the frozen compartment(s)** | 3.7 cu. ft. |

## Electrical Connection

| | | | |
|---|---|---|---|
| **Current** | 3.5 A | **Power supply cable length** | 78 3/4 " |
| **Voltage (V)** | 115 V | **Plug** | (B) NEMA 5-15P |
| **Frequency (Hz)** | 60 Hz | | |

## Logistic Information

| | | | |
|---|---|---|---|
| **Width** | 29 15/16 " | **Height** | 83 7/16 " |
| **Width of the built-in niche** | 30 " | **Height of the built-in niche** | 84 " |
| **Depth without handle** | 24 " | **Product width with maximum doors opening** | 34 13/16 " |
| **Depth of the built-in niche** | 24 " | **Product depth with doors open at 90°** | 52 11/16 " |

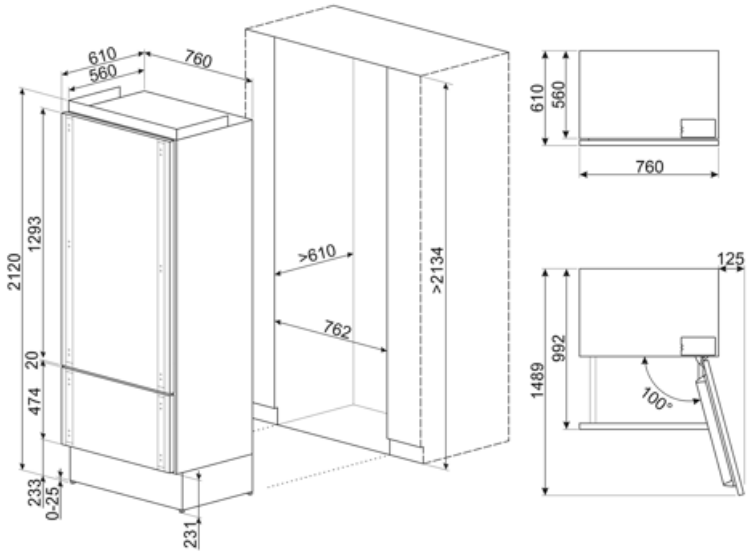

## Compatible Accessories

**RSFZLK**

## Symbols glossary



The automatic defrost system works by automatically defrosting at regular intervals eliminating the need to defrost altogether.




LED interior lighting: is a more energy efficient and long lasting way of illuminating the interior of the appliance.



Air plus: keeps food fresher for longer.



Power saving mode: The power saving mode allows you to disable the refrigerator and keep the freezer working.




Smeg's evolution towards more intelligent and eco-friendly models has led to the choice of Inverter technology, which significantly reduces consumption.



SABBATH: function that allows to cook food respecting Judaism's day of rest provisions.