RBMU36R



Product Family	Refrigerator
Installation	Built-in
Category	Bottom Mount
Built-in niche	>200
Sistema Total No - Frost	Total
Cooling type	Total No Frost
Defrost	Automatic
Hinge type	Door on door
Kitchen panel	Not supplied
Hinge position	Right
EAN code	8017709332716

Aesthetics

Aesthetic	Universale
Material	Stainless steel
Logo colour	Silver
Side material	Steel
Logo	Silk screen
Door shelves profile color	Silver
Drawers profile color	Silver
Color of glass shelf profile	Silver
Display	TFT
Display porition	Interno (sul Top)
Water Filter	Yes
Alternative colours available	Stainless steel

Refrigerator compartment features

Number of compartments	2
Compartment types	Low temperature compartment, Fruit and vegetable compartment
No. of adjustable shelves	3
Number of fruit and vegetables drawers	1
Shelves material	Glass
Type of crisper/vegetable drawers cover	On sliding rails
Crisper Cover	Yes
Type of crisper/vegetable drawers cover	Glass
Low temperature compartment	Yes
Internal light in fridge	Yes
Type of internal light (fridge)	LED

Refrigerator Inner Door

Number of adjustable door shelves	3	**Adjustable door shelves with wire support**	Yes

Other Refrigerator features



MultiFlow	Yes

Freezer compartment features

Number of drawers	1	**Internal light in freezer**	Yes
No. of lights freezer compartment	2	**Type of internal light (freezer)**	LED

Other Freezer features

Ice maker	Automatic	**Ice shape**	Cubes
Ice Maker Location	Internal	**Ice tray shelf**	Yes
Daily ice production	1.5 kg		

Other technical features

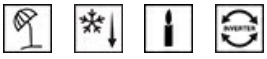

Functions display	Holiday, Fast freezing, Fast cooling, Temperature alarm, Demo Mode, Sabbath
MultiZone	Yes
Water network connection	Yes
Power on lamp	Yes
Temperature alarm lamp	Yes
Door open alarm	Yes
Type of temperature control	Electronic
No. of compressors	2
Refrigerant gas type	R600a
Type of compressor	Inverter
Refrigerant Quantity (gr)	3.8 oz
Foam agent	HFO

Performance / Energy Label - Reg. 2019

Annual energy consumption	580 kWh/year	**Sum of the volumes of the chill compartment(s) and the unfrozen compartment(s)**	15.0 cu. ft.
Total net volume	19.6 cu. ft.		
Sum of the volumes of the frozen compartment(s)	4.6 cu. ft.	**Total gross volume**	20.5 cu. ft.

Electrical Connection

Current	3.5 A	**Power supply cable length**	78 3/4 "
Voltage (V)	115 V	**Plug**	(B) NEMA 5-15P
Frequency (Hz)	60 Hz		

Logistic Information

Width	35 7/8 "	**Height**	83 7/16 "
Width of the built-in niche	36 "	**Height of the built-in niche**	84 "
Depth without handle	24 "	**Product width with maximum doors opening**	42 1/8 "
Depth of the built-in niche	24 "	**Product depth with doors open at 90°**	58 5/8 "

Also available

Installation kit code	RSFZLK

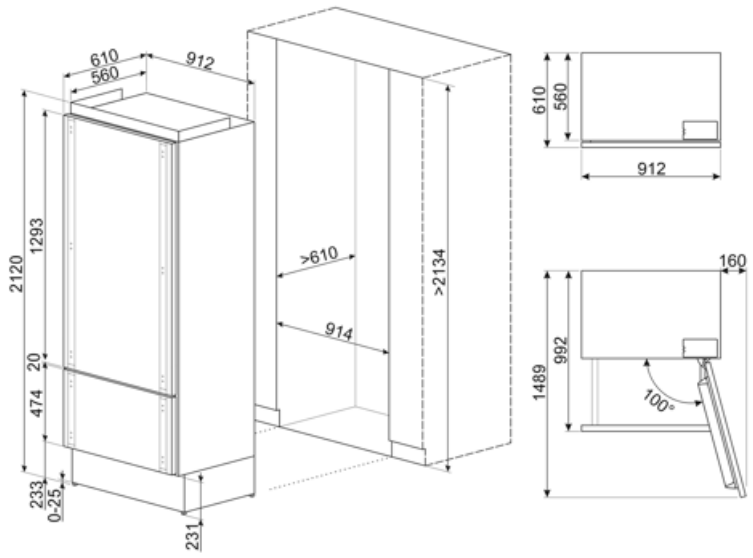

Compatible Accessories

RSFZLK

Symbols glossary



The automatic defrost system works by automatically defrosting at regular intervals eliminating the need to defrost altogether.



Power saving mode: The power saving mode allows you to disable the refrigerator and keep the freezer working.



Smeg's evolution towards more intelligent and eco-friendly models has led to the choice of Inverter technology, which significantly reduces consumption.



SABBATH: function that allows to cook food respecting Judaism's day of rest provisions.



Fast freezing: The fast freezing function brings the temperature of the compartment down when activated a few hours prior to usage.



LED interior lighting: is a more energy efficient and long lasting way of illuminating the interior of the appliance.



Air plus: keeps food fresher for longer.