RC20XDNE



Product Family	Refrigerator
Installation	Free standing
Category	Bottom Mount
Reference width	Until 60 cm
Reference height	160 - 200 cm
Sistema Total No - Frost	Yes
Cooling type	Total No Frost
Defrost	Automatic
Hinge type	Standard
Hinge position	Right
Reversible door	Yes
EAN code	8017709343262

Aesthetics

Aesthetic	Universale	**Side material**	Steel
Colour	Inox Look	**Side colour**	Silver
Material	Steel Effect	**Logo**	Applied
Handle	Integrated	**Display**	LED
Handle type	Fixed	**Display position**	Esterno (su porta)
Logo colour	Chrome		

Refrigerator compartment features

Number of compartments	2	**Bottle shelf**	Yes
Compartment types	Low temperature compartment, Fruit and vegetable compartment	**Type of crisper/vegetable drawers cover**	Glass
No. of adjustable shelves	3	**No. of lights refrigerator compartment**	1
Number of fruit and vegetables drawers	1	**Low temperature compartment**	Yes
Shelves material	Glass	**Internal light in fridge**	Yes
Type of crisper/vegetable drawers cover	On sliding rails	**Type of internal light (fridge)**	LED
Crisper Cover	Yes		

Refrigerator Inner Door

Number of adjustable door shelves	3	**No. of bottle shelves**	1

Other Refrigerator features



Accessories	Bottle holder, Egg tray	**MultiFlow**	Yes

Freezer compartment features

Number of drawers	3

Other Freezer features

Accessories	1 ice box

Other technical features



Functions display	Fast freezing, ECO
Door open alarm	Yes
Temperature Alarm	Yes
Type of temperature control	Electronic
No. of compressors	1
Refrigerant gas type	R600a
Type of compressor	Standard
Foam agent	Cyclopentane

Performance / Energy Label - Reg. 2019



Annual energy consumption	246 kWh/a	**Airborne acoustical noise emissions**	38 dB(A) re 1 pW
Energy efficiency class	E	**Temperature Rise Time**	10 h
Airborne acoustical noise emission class	C	**4 star - Freezing capacity**	9,0 kg/24h
Total net volume	331 l	**Climate class**	SN, N, ST, T
Sum of the volumes of the frozen compartment(s)	96 l	**EEI**	100 %

Sum of the volumes of the chill compartment(s) and the unfrozen compartment(s)	235 l

Electrical Connection

Electrical connection rating	70 W	**Frequency (Hz)**	50 Hz
Current	10 A	**Power supply cable length**	200 cm
Voltage (V)	220-240 V	**Plug**	(F;E) Schuko

Logistic Information

Width	600 mm	**Height**	2000 mm
Depth without handle	592 mm	**Product width with maximum doors opening**	600 mm

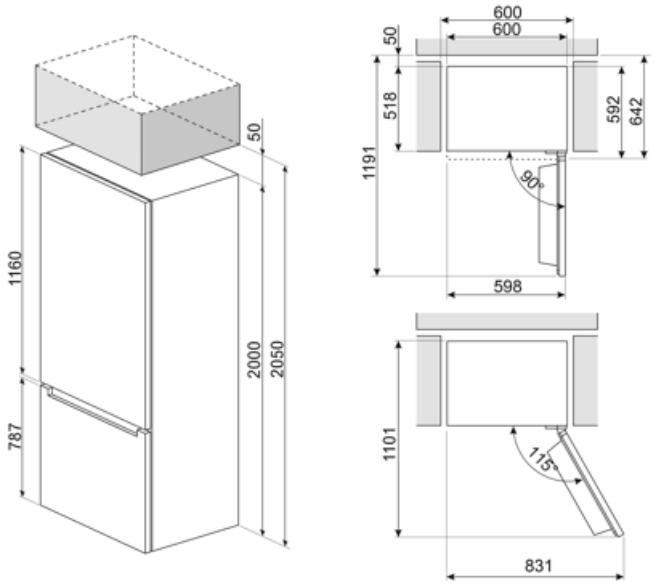

Symbols glossary



The automatic defrost system works by automatically defrosting at regular intervals eliminating the need to defrost altogether.



LED display: to show programmes, functions and options selected and the time to the end of the cycle.



Fast freezing: The fast freezing function brings the temperature of the compartment down when activated a few hours prior to usage.



Multiflow Cooling System: the Multiflow ventilation system allows an even distribution of cool air around the fridge cabinet.



Energy efficiency class E



Economical mode: Analyzes fridge functioning during the activation and optimizes the operating cycle in order to reduce power consumption.



LED interior lighting: is a more energy efficient and long lasting way of illuminating the interior of the appliance.