RF28KNZA



Product Family	Freezers
Installation	Free Standing
Category	Single door
Reference width	Until 60 cm
Reference height	160 - 200 cm
Cooling type	No Frost
Hinge type	Standard
Hinge position	Left
Reversible door	Yes

Aesthetics

Aesthetic	Universale	**Handle colour**	Silver
Colour	Dark Inox Look	**Side material**	Metal
Design	Flat	**Side colour**	Anthracite
Finishing	Fingerproof	**Logo**	Applied
Material	Steel Effect	**Drawers profile color**	Dark Inox Look
Handle	External	**Display**	LED
Handle type	Active		

Freezer compartment features

Internal light in freezer	Yes
Type of internal light (freezer)	LED
Number of drawers	5
No. of lights freezer compartment	1

Other Freezer features

Warehouse availability first date	Yes

Other technical features

Functions display	Holiday, Fast Feezing, Temperature Alarm	**Refrigerant gas type**	R600a
Fast freezing button	Yes	**Type of compressor**	Inverter
Power on lamp	Yes	**Refrigerant Quantity (gr)**	60 g
Temperature alarm	Yes	**Foam agent**	Cyclopentane
Type of temperature control	Electronic	**Metal panel on the back of the fridge**	
No. of compressors	1		

Performance / Energy Label - Reg. 2019

Total net volume	278 l	**4 star - Freezing capacity**	14,5 kg/24h
Noise level	41 dB(A) re 1 pW		

Electrical Connection

Electrical connection rating	231 W	**Frequency (Hz)**	50 Hz
Current	1,25 A	**Power supply cable length**	210 cm
Voltage	220-240 V	**Plug**	(F;E) Schuko

Logistic Information

Width	595 mm	**Product width with maximum doors opening**	711 mm
Depth without handle	650 mm	**Product depth with doors open at 90°**	1244 mm
Height, maximum value	1860 mm		

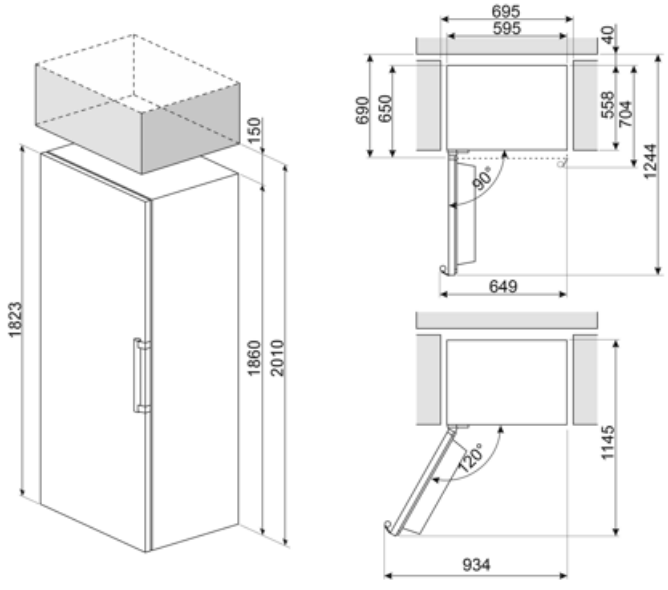

Symbols glossary



LED display: to show programmes, functions and options selected and the time to the end of the cycle.



Power saving mode: The power saving mode allows you to disable the refrigerator and keep the freezer working.



Smeg's evolution towards more intelligent and eco-friendly models has led to the choice of Inverter technology, which significantly reduces consumption.



Fast freezing: The fast freezing function brings the temperature of the compartment down when activated a few hours prior to usage.



LED interior lighting: is a more energy efficient and long lasting way of illuminating the interior of the appliance.



No Frost: The No Frost and Frost free systems prevent ice from forming so that no defrosting is required.