RSDU30R



Product Family	Refrigerator
Installation	Built-in
Category	One Door
Built-in niche	>200
Sistema Total No - Frost	Yes
Cooling type	Total No Frost - Double Cooling system
Defrost	Automatic
Hinge type	Door on door
Kitchen panel	Not supplied
Hinge position	Right
EAN code	8017709332747

Aesthetics

Aesthetic	Universale	**Drawers profile color**	Silver
Material	Metal sheet	**Color of glass shelf profile**	Silver
Logo colour	Silver	**Display**	TFT
Side material	Steel	**Display porition**	Interno (sul Top)
Logo	Silk screen	**Water Filter**	Yes
Door shelves profile color	Silver		

Refrigerator compartment features

Number of compartments	3	**Type of crisper/vegetable drawers cover**	On sliding rails
Compartment types	Fruit and vegetable compartment	**Crisper Cover**	Yes
No. of adjustable shelves	3	**Type of crisper/vegetable drawers cover**	Glass
Number of fruit and vegetables drawers	3	**Internal light in fridge**	Yes
Shelves material	Glass	**Type of internal light (fridge)**	LED

Refrigerator Inner Door

Number of adjustable door shelves	3	**Adjustable door shelves with wire support**	Yes

Other Refrigerator features



MultiFlow	Yes

Other technical features



Functions display	Holiday, Fast cooling, Temperature alarm, Demo Mode, Sabbath
Door open alarm	Yes
Temperature Alarm	Yes
Type of temperature control	Electronic
No. of compressors	2
Refrigerant gas type	R600a
Type of compressor	Inverter
Refrigerant Quantity (gr)	3.0 oz

Performance / Energy Label - Reg. 2019

Annual energy consumption	343 kWh/year	**Sum of the volumes of the chill compartment(s) and the unfrozen compartment(s)**	17.4 cu. ft.
Total net volume	17.4 cu. ft.	**Climate class**	SN, N, ST, T

Electrical Connection

Current	2,5 A	**Power supply cable length**	78 3/4 "
Voltage (V)	115 V	**Plug**	(B) NEMA 5-15P
Frequency (Hz)	60 Hz		

Logistic Information

Width	29 15/16 "	**Height**	83 7/16 "
Width of the built-in niche	30 "	**Height of the built-in niche**	84 "
Depth without handle	24 "	**Product width with maximum doors opening**	35 1/8 "
Depth of the built-in niche	24 "	**Product depth with doors open at 90°**	52 11/16 "

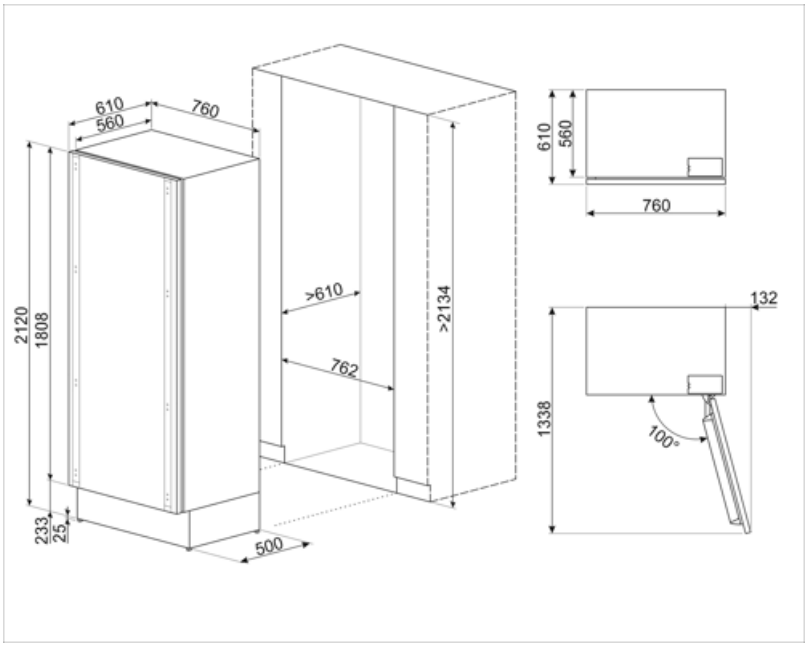
610
560
760
2120
1808
>610
762
>2134
233
25
500
610
560
760
132
1338
100°

Compatible Accessories

RSFZLK

Symbols glossary



The automatic defrost system works by automatically defrosting at regular intervals eliminating the need to defrost altogether.



LED interior lighting: is a more energy efficient and long lasting way of illuminating the interior of the appliance.



Air plus: keeps food fresher for longer.



Power saving mode: The power saving mode allows you to disable the refrigerator and keep the freezer working.



Smeg's evolution towards more intelligent and eco-friendly models has led to the choice of Inverter technology, which significantly reduces consumption.



SABBATH: function that allows to cook food respecting Judaism's day of rest provisions.