S4L100E



Product Family	Refrigerator
Installation	Built-in
Category	One Door
Built-in niche	102
Reference width	Until 60 cm
Reference height	100 - 160 cm
Cooling type	Static
Defrost	Automatic
Hinge type	Sliding
Kitchen panel	Not supplied
Hinge position	Right
Reversible door	Yes
EAN code	8017709337117

Aesthetics

Aesthetic	Universale	**Side material**	Steel
Colour	White	**Side colour**	White
Design	Flat	**Logo**	Silk screen
Material	Metal sheet	**Door shelves profile color**	White
Handle type	Fixed	**Color of glass shelf profile**	White
Logo colour	Black		

Refrigerator compartment features

Number of compartments	1	**Crisper Cover**	Yes
Compartment types	Fruit and vegetable compartment	**Type of crisper/vegetable drawers cover**	Glass
No. of adjustable shelves	3	**No. of lights refrigerator compartment**	1
Number of fruit and vegetables drawers	1	**Internal light in fridge**	Yes
Shelves material	Glass	**Type of internal light (fridge)**	LED
Type of crisper/vegetable drawers cover	Standard		

Refrigerator Inner Door

No. of door shelves with transparent cover	1	**No. of bottle shelves**	1

Number of adjustable door shelves	2

Other Refrigerator features

Accessories	Egg tray

Other technical features

Type of temperature control	Electro-mechanical
No. of compressors	1
Refrigerant gas type	R600a
Type of compressor	Standard
Refrigerant Quantity (g)	20 g
Foam agent	Cyclopentane

Performance / Energy Label - Reg. 2019



Annual energy consumption	98 kWh/a
Energy efficiency class	E
Airborne acoustical noise emission class	B
Total net volume	182 l
Sum of the volumes of the chill compartment(s) and the unfrozen compartment(s)	182 l
Airborne acoustical noise emissions	35 dB(A) re 1 pW
Climate class	SN, N, ST
EEI	99 %

Electrical Connection

Electrical connection rating	70 W
Current	0,4 A
Voltage (V)	230-240 V
Frequency (Hz)	50 Hz
Power supply cable length	240 cm
Plug	(F;E) Schuko

Logistic Information

Width	548 mm
Width of the built-in niche	560 mm
Depth without handle	549 mm
Depth of the built-in niche	550 mm
Height	1021 mm
Height of the built-in niche	1030 mm
Product width with maximum doors opening	548 mm
Spacer depth	38 mm

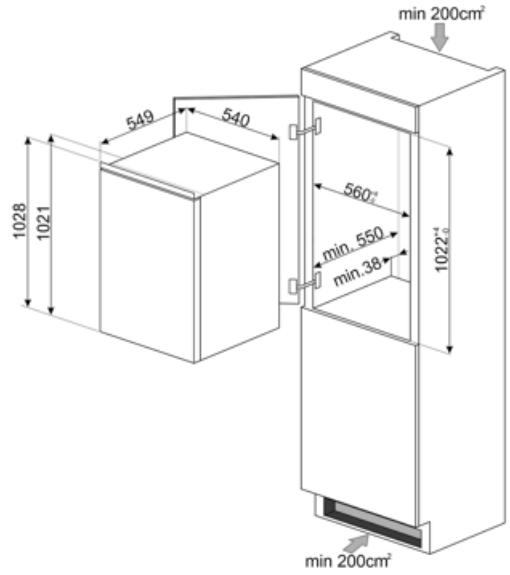
min 200cm²
549
540
1028
1021
560+2
min. 550
min.38
1022+4 0
min 200cm²

Symbols glossary



The automatic defrost system works by automatically defrosting at regular intervals eliminating the need to defrost altogether.



LED interior lighting: is a more energy efficient and long lasting way of illuminating the interior of the appliance.



Built-in niche



Energy efficiency class E