S9F174DND



Product Family	Freezers
Installation	Built-in
Built-In Niche	178 cm
Category	Single door
Reference width	Until 60 cm
Reference height	160 - 200 cm
Cooling type	No Frost
Hinge type	Door on door
Hinge position	Right
Reversible door	Yes

Aesthetics

Aesthetic	Universale	**Logo**	Silk screen
Colour	White	**Drawers profile color**	Silver
Side material	Metal	**Display**	LCD Touch
Side colour	White	**Display position**	Interno (sul Top)

Freezer compartment features

Number of drawers	5
No. of compartments with flap	2

Other technical features

Freezer compartment accessories	Ice cube tray	**No. of compressors**	1
Functions display	Fast Feezing, Control lock, Temperature Alarm, Cooling timer	**Refrigerant gas type**	R600a
Fast freezing button	Yes	**Type of compressor**	Inverter
Door open alarm	Yes	**Refrigerant Quantity (g)**	55 g
Temperature alarm	Yes	**Foam agent**	Cyclopentane
Type of temperature control	Electronic	**Max weight door panel (freezer)**	25 kg

Performance / Energy Label - Reg. 2019

Annual energy consumption	189 kWh/a	**Sum of the volumes of the frozen compartment(s)**	212 l
Total net volume	212 l	**Temperature Rise Time**	10 h
Energy efficiency class	D	**4 star - Freezing capacity**	18,5 kg/24h
Airborne acoustical noise emission class	B	**Climate class**	SN, N, ST, T
Noise level	35 dB(A) re 1 pW	**EEI**	80 %

Electrical Connection

Electrical connection rating	140 W	**Frequency (Hz)**	50 Hz
Current	1 A	**Power supply cable length**	240 cm
Voltage	230-240 V	**Plug**	(F;E) Schuko

Logistic Information

Width	557 mm	**Depth of the built-in niche**	550 mm
Width of the built-in niche	560 mm	**Height of the built-in niche**	1780 mm
Depth without handle	549 mm	**Product width with maximum doors opening**	780 mm
Height, maximum value	1769 mm		

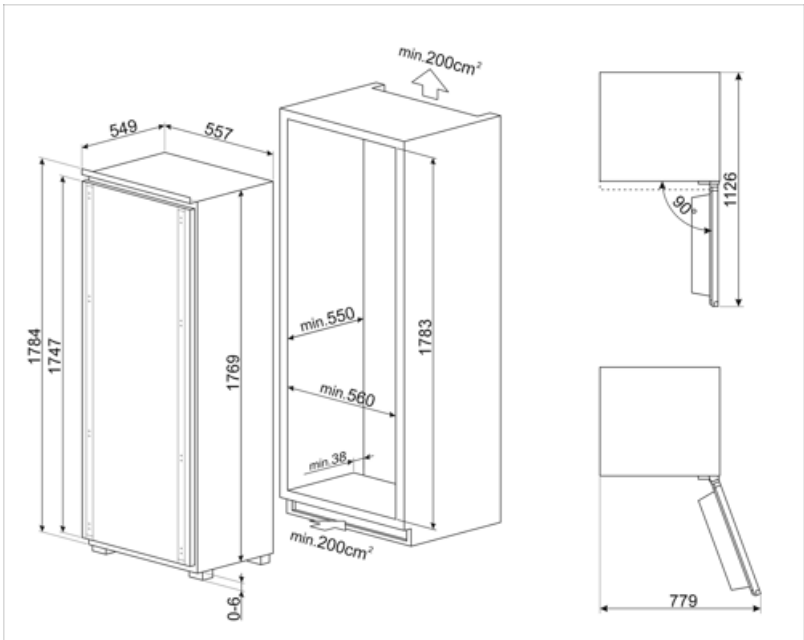

Symbols glossary



Child lock: some models are fitted with a device to lock the programme/cycle so it cannot be accidentally changed.



LCD display: to optimize performance and simplify the use of the appliance.



Smeg's evolution towards more intelligent and eco-friendly models has led to the choice of Inverter technology, which significantly reduces consumption.



No Frost: The No Frost and Frost free systems prevent ice from forming so that no defrosting is required.



Energy efficiency class D



Fast freezing: The fast freezing function brings the temperature of the compartment down when activated a few hours prior to usage.



Built-in niche