SBC4304WX

Product Family	Blast chiller
Category	45 cm compact
Vitality system	Yes
Power supply	Electric
Heat source	Electric
Cooling type	Fan assisted



Aesthetics

Aesthetic	Classica	**Alternative colours available**	Stainless steel, Nero Lucido
Colour	Stainless Steel	**Glass Type**	Eclipse
Finishing	Fingerproof	**Door**	With 2 horizontal strips
Design	Flat	**Handle**	Classic
Component finish	Stainless steel	**Handle Colour**	Steel effect
Material	Stainless steel	**Logo**	Embossed
Type of steel	Brushed		

Program / Functions

Automatic programmes	8
No. of warming functions	6
N. cold functions	6
Automatic cleaning	
Customisable recipes	100

Cold functions

- Bottles Cooling
- Cooling
- Deep Freezing
- Pre-cooling
- Preservation
- Raw fish sanitizing

Warming functions

- Low Temperature Cooking
- Proving
- Ready to eat
- Defrosting
- Heating
- Yoghurt

Multi-step	Yes, up to 2 functions

Controls

Display / Clock	TFT graphic , colour touch screen	**Control setting**	Touch control

Options

Door open alarm	Yes	**Cooling with probe**	Yes
Minute minder	Yes	**Showroom demo option**	Yes
Timer	2	**Tones**	Polyphonic
Controls Lock / Child Safety	Yes	**Chronology**	Yes, the last 10 functions utilized
Cooking with probe thermometer	Yes	**Touch guide**	Sì, a pressione prolungata su display

Technical Features

Compressor type	Standard	**No. of lights**	1
Refrigerant gas type	R290	**Light type**	LED
Refrigerant Quantity	65 g	**Light Power**	1 W
Climatic class	SN, N, ST, T	**Light when door is opened**	Yes
Temperature control	Electronic	**Upper heating element - Power**	250 W
Minimum Temperature	-30 °C	**Door opening type**	Standard opening
Maximum temperature	80 °C	**Safety Thermostat**	Yes
Cavity material	Stainless steel	**Heating suspended when door is opened**	Yes
No. of shelves	3	**Gross volume**	34 l
Shelves type	Metal racks		

Accessories included

Bottle rack grid	Yes	**Other**	Microfiber cloth
Temperature probe	Yes		

Electrical Connection

Voltage	220-240 V	**Current**	2.5 A
Plug	(F;E) Schuko	**Frequency (Hz)**	50 Hz
Electrical connection rating (W)	270 W	**Power supply cable length**	200 cm

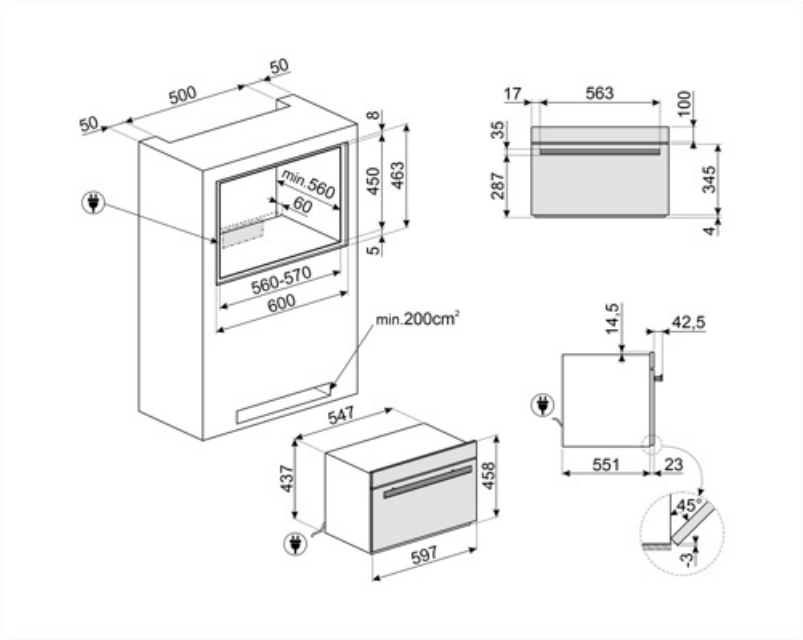
50
500
50
8
min.560
60
450
463
5
560-570
600
min.200cm²
547
437
458
597
17
563
100
35
287
345
4
14,5
42,5
551
23
45°
3

Symbols glossary



Child lock: some models are fitted with a device to lock the programme/cycle so it cannot be accidentally changed.



Cold storage: allows to keep the food at the desired temperature between -35°C and +75°C and serve it at its best to enhance flavours and aromas.



Bottles cooling: is possible to quickly cool wine and beverage bottles, reducing the need for storage in the refrigerator, with considerable space savings. Cooling of beverages takes place at about 1°C per minute.



Deep freezing of the food is a very quick process (From 0/90°C temperature to -18°C in less than 270 min) that allows to extend the average life of food (by up to 70% more) and keep the same organoleptic and nutritional characteristics of fresh food, because it avoid the formation of macro-crystals, that ruin the fibers of the food.



Fingerprint proof stainless steel: Fingerprint proof stainless steel keeps stainless steel looking as good as new.



Compact appliances with a height of 45 cm - perfect solution to meet the functional requirements of kitchen sets of small height. Available in several types and in different styles.



Touch controls: Easy to use touch controls allow the appliance to be programmed at the touch of a button.



Ready to eat: This function allows to keep food safely at the refrigerator temperature throughout the day, and heat it just before your return to make it warm, ready to be consumed.



Dough leavening/ Yogurt: this function allows you to create the perfect conditions for correct leavening, keeping the mixture at controlled temperatures for the desired time, avoiding sudden changes in humidity levels. This feature also allows the creation of genuine homemade yogurt.



Cooling: It allows to quickly cool the food, from the temperature of 80/90°C to 3°C in less than 90 minutes, to prevent bacterial growth, prolong the average life of food and maintain unaltered the quality of food.



Pre-cooling: allows the cavity to cool to -30 °C before inserting food into the blast chiller, to ensure the best cooling and freezing results. It is recommended to run a 15-minute pre-cooling cycle.



The function enables a professional cycle that combines pre-cooling, blast freezing, and controlled conservation to eliminate the risk of dangerous parasites such as Anisakis without compromising texture and nutritional properties, ensuring safe, high-quality raw fish at home.



Electric



Automatic cleaning: a drying cycle of the cavity to be run with the door open, to eliminate any condensation formed during use.



Appliances with Wi-Fi connectivity. Via SmegConnect App is possible to monitor and remotely control appliances through smartphone and tablet (iOS and Android).



The capacity indicates the amount of usable space in the oven cavity in litres.



Low temperature cooking: This function consists in cooking food at a constant temperature, lower than the traditional cooking temperature. Meat results more tender and juicy, maintaining a softness that only this cooking technique allows to obtain.



Wi-Fi connectivity