SBS63XDE



Product Family	Refrigerator
Installation	Free standing
Category	Side-by-side
Reference width	Higher than 80 cm
Reference height	160 - 200 cm
Sistema Total No - Frost	Yes
Cooling type	Total No Frost
Defrost	Automatic
Hinge type	Standard
EAN code	8017709337636

Aesthetics

Aesthetic	Universale	**Side material**	Steel
Colour	Inox Look	**Side colour**	Silver
Design	Flat	**Logo**	Applied
Material	Steel Effect	**Drawers profile color**	Silver
Handle	External	**Color of glass shelf profile**	Silver
Handle type	Fixed	**Display**	LED
Handle colour	Stainless steel	**Display position**	Esterno (su porta)
Logo colour	Chrome		

Refrigerator compartment features

Number of compartments	4	**Crisper Cover**	Yes
Compartment types	Low temperature compartment, Fruit and vegetable compartment	**Type of crisper/vegetable drawers cover**	Glass
No. of adjustable shelves	3	**Low temperature compartment**	Yes
Number of fruit and vegetables drawers	2	**Internal light in fridge**	Yes
Shelves material	Glass	**Type of internal light (fridge)**	LED
Type of crisper/vegetable drawers cover	Standard		

Refrigerator Inner Door

Number of adjustable door shelves	4	**No. of bottle shelves**	1

Other Refrigerator features



Accessories	Egg tray	**Fan**	Yes
Natural Plus Blu Light	Yes	**Ionizer**	Yes
MultiFlow	Yes	**Antibacterial odour filter**	Yes

Freezer compartment features

Number of drawers	2	**Type of internal light (freezer)**	LED
No. of shelves	4	**Type of shelves**	Glass
Internal light in freezer	Yes		

Freezer Inner Door

No. of adjustable door shelves	4

Other Freezer features



Ice maker	Manual	**Fast freezing compartment**	Yes

Other technical features



Functions display	Holiday, Fast freezing, Fast cooling, ECO, Control lock, Temperature alarm
Fast freezing button	Yes
Door open alarm	Yes
Temperature Alarm	Yes
Type of temperature control	Electronic
No. of compressors	1
Refrigerant gas type	R600a
Foam agent	Cyclopentane

Performance / Energy Label - Reg. 2019

Annual energy consumption	327 kWh/a	**Airborne acoustical noise emissions**	38 dB(A) re 1 pW
Energy efficiency class	E	**Temperature Rise Time**	9 h
Airborne acoustical noise emission class	C	**4 star - Freezing capacity**	13.0 kg/24h
Total net volume	580 l	**Climate class**	SN, N, ST, T
Sum of the volumes of the frozen compartment(s)	212 l	**EEI**	99 %
Sum of the volumes of the chill compartment(s) and the unfrozen compartment(s)	368 l		

Electrical Connection

Electrical connection rating	150 W	**Frequency (Hz)**	50 Hz
Current	0.85 A	**Power supply cable length**	215 cm
Voltage (V)	220-240 V	**Plug**	(F;E) Schuko

Logistic Information

Width	910 mm	**Height**	1790 mm
Depth without handle	750 mm		

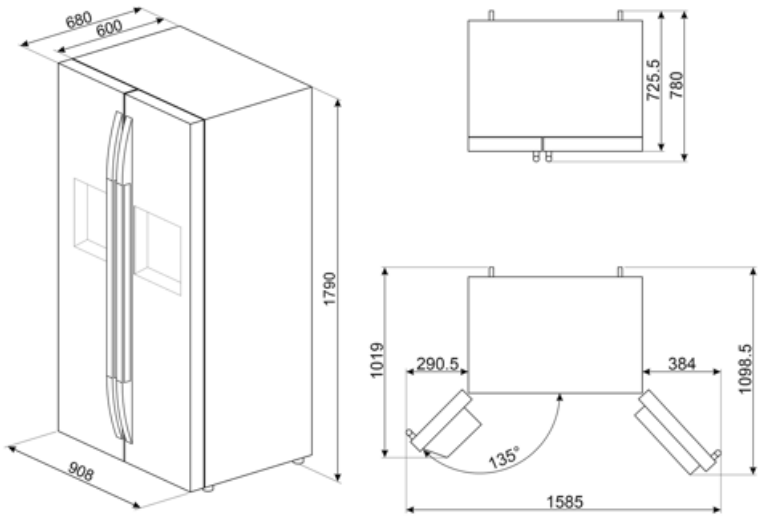

Symbols glossary



Smeg Active Ion system improves the quality of the air inside the cell. Thanks to the generation of negatively charged ions released inside the fridge Active Ion system neutralizes unpleasant dust.



Child lock: some models are fitted with a device to lock the programme/cycle so it cannot be accidentally changed.



Economical mode: Analyzes fridge functioning during the activation and optimizes the operating cycle in order to reduce power consumption.



Fast freezing: The fast freezing function brings the temperature of the compartment down when activated a few hours prior to usage.



LED interior lighting: is a more energy efficient and long lasting way of illuminating the interior of the appliance.



Natural Plus Blu Light: This unique Natural Plus Blu Light system works with nature to increase the storage time of fruit and vegetables.



The automatic defrost system works by automatically defrosting at regular intervals eliminating the need to defrost altogether.



LED display: to show programmes, functions and options selected and the time to the end of the cycle.



Ventilated: Forced distribution of cold air in the refrigerator compartment, which allows even temperature distribution within the fridge.



Power saving mode: The power saving mode allows you to disable the refrigerator and keep the freezer working.



Multiflow Cooling System: the Multiflow ventilation system allows an even distribution of cool air around the fridge cabinet.



Energy efficiency class E