SCB92PN8

Cooker size	90x60 cm
N. of cavities with energy label	2
Cavity heat source	ELECTRICITY
Hob type	Gas
Type of main oven	Thermo-ventilated
Type of second oven	Static
Cleaning system main oven	Pyrolitic
EAN code	8017709149710
Energy efficiency class	A
Energy efficiency class, second cavity	A



Aesthetics

Design	Standard	**Type of control knobs**	Smeg Classic
Command panel finish	Enamelled metal	**Controls colour**	Stainless steel
Aesthetic	Classica	**No. of controls**	8
Logo	Assembled	**Serigraphy colour**	Silver
Colour	Black	**Display name**	Electronic 5 buttons
Logo position	Facia below the oven	**Door**	With 2 horizontal strips
Upstand	Yes	**Glass type**	Stopsol
Series	Concerto	**Handle**	Smeg Classic
Hob colour	Stainless steel	**Handle Colour**	Brushed stainless steel
Type of pan stands	Cast Iron	**Storage compartment**	Door
Type of control setting hob	Control knobs	**Feet color**	Silver

Programs / Functions main oven

No. of cooking functions 9

Traditional cooking functions

- Static
- Fan assisted
- Circulaire
- Turbo
- Eco
- Small grill
- Large grill
- Fan grill (large)
- Fan assisted base

Cleaning functions

Pyrolytic

Programs / Functions auxiliary oven

Bottom element + Upper element

Traditional cooking functions, cavity 2

Static

Small grill

Large grill

Bottom

Fan-assisted bottom

Hob technical features

UR

Total no. of cook zones 5

Front left - Gas - Rapid - 1.00 kW
Rear left - Gas - Semi Rapid - 1.80 kW
Central - Gas - UR - 3.50 kW
Rear right - Gas - Semi Rapid - 1.80 kW
Front right - Gas - AUX - 3.00 kW

Type of gas burners	Standard	**Gas safety valves**	Yes
Automatic electronic ignition	Yes	**Burner caps**	Matt black enamelled

Main Oven Technical Features

No. of lights	1	**Total no. of door glasses**	4
Fan number	1	**No.of thermo-reflective door glasses**	3
Net volume of the cavity	70 l	**Safety Thermostat**	Yes
Gross volume, 1st cavity	79 l	**Heating suspended when door is opened**	Yes
Cavity material	Ever Clean enamel	**Cooling system**	Tangential
No. of shelves	5	**Door Lock During Pyrolisis**	Yes
Type of shelves	Metal racks	**Usable cavity space dimensions (HxWxD)**	360X460X425 mm
Light type	Halogen	**Temperature control**	Electro-mechanical
Light Power	40 W	**Lower heating element power**	1200 W
Cooking time setting	Start and Stop	**Upper heating element - Power**	1000 W
Light when oven door is open	Yes	**Grill element**	1700 W
Removable door	Yes	**Large grill - Power**	2700 W
Full glass inner door	Yes		
Removable inner door	Yes		

Circular heating element - Power	2000 W
Grill type	Electric

Options Main Oven

Timer	Yes	**Minimum Temperature**	50 °C
End of cooking acoustic alarm	Yes	**Maximum temperature**	280 °C

Second Oven Technical Features



Net volume of the second cavity	35 l	**No. total door glasses**	3
Gross volume, 2nd cavity	36 l	**No. thermo-reflective door glasses**	3
Cavity material	Ever Clean enamel	**Safety Thermostat**	Yes
No. of shelves	4	**Cooling system**	Tangential
Type of shelves	Metal racks	**Usable cavity space dimensions (HxWxD)**	311x206x418 mm
No. of lights	1	**Temperature control**	Electro-mechanical
Light type	Incandescent	**Lower heating element - power**	700 W
Light Power	25 W	**Upper heating element - Power**	600 W
Removable door	Yes	**Grill element - power**	1300 W
Full glass inner door	Yes	**Large grill - Power**	1900 W
Removable inner door	Yes	**Grill type**	Electric

Options Auxiliary Oven

Minimum Temperature	50 °C	**Maximum temperature**	245 °C

Accessories included for Main Oven & Hob

Moka stand	1	**40mm deep tray**	1
Rack with back and side stop	1	**Grill mesh**	1
20mm deep tray	1		

Accessories included for Secondary Oven

Rack with back and side stop	1	**Grill mesh**	1
Wide baking tray	1		

Electrical Connection

Electrical connection rating	5200 W	**Additional connection modalities**	Double and Three Phase
Current	23 A	**Frequency**	50/60 Hz
Voltage	220-240 V	**Terminal block**	5 poles
Voltage 2 (V)	380-415 V	**Plug**	Not present
Electric cable	Installed, Single phase		

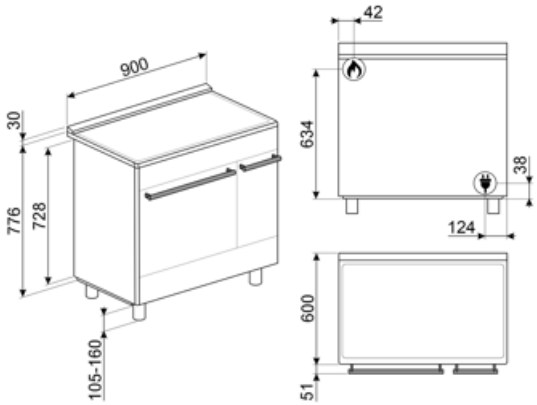

Compatible Accessories



BN620-1

Enamelled tray suitable for 45 cm and 60 cm ovens. Depth 20 mm. Perfect for a wide range of savoury and sweet baking.



BNP608T

Teflon-coated tray, 8 mm depth, to be placed on the grid



GTT

Totally extractable telescopic guides (1 level), suitable for traditional ovens. Made in stainless steel, they guarantee stability and facilitate the smooth extraction of the trays.

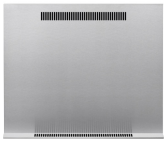

KITPC92X9

Splashback, 90cm, stainless steel, for Concerto cookers with double pyrolitic ovens



SFLK1

Child lock



BN640

Enamelled tray suitable for 45cm and 60cm ovens. Depth 540 mm. Perfect for cooking and roasting meat and fish in sauces. Also ideal for experimenting with lighter and crunchy side dishes



GTP

Partially extractable telescopic guides (1 level), suitable for traditional ovens. Made in stainless steel, they guarantee stability and facilitate the smooth extraction of the trays.

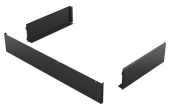

KITH900BG91

Plinth, 90cm, three sides, black, suitable for Concerto cookers single or double cavities, hight 900 mm



KITSB9MB

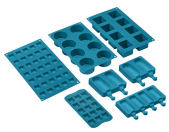

SMOLD

Set of 7 silicone moulds for ice creams, ice lollies, pralines, ice cubes or to portion food. Usable from -60°C to +230°C

Symbols glossary



Heavy duty cast iron pan stands: for maximum stability and strength.



Installation in column: Installation in column.



Air cooling system: to ensure a safe surface temperatures.



Quadruple glazed: Number of glazed doors.



Energy efficiency class A



Knobs control



Triple glazed doors: Number of glazed doors.



Ever Clean Enamel: Ever Clean enamel is applied electrostatically, corner to corner and edge to edge to prevent cracking or cracks over time. It is a particular pyrolytic enamel, resistant to acids which, in addition to being pleasantly bright, promotes greater cleaning of the oven walls, thanks to its lower porosity. It is baked at over 850 °C and slowly polymerized at a scientifically determined rate to ensure uniform depth and strength. Ever Clean enamel creates an impeccable finish both on the inside of the oven and on the trays, making the surfaces of the oven incredibly easy to maintain over time as it reduces the adhesion of fat during cooking.



Fan assisted base: the mix of fan and lower heating element alone allows to finish cooking foods already cooked on the surface but not internally more quickly. This system is recommended to finish cooking foods that are already well cooked on the surface, but not internally, which therefore require a moderate higher heat. Ideal for any type of food.



Static: Traditional cooking suitable for the preparation of one dish at a time. The fan is not active and the heat comes from below and from above at the same time. Static cooking is slower and more delicate, ideal in order to get well cooked and dry dishes even inside. Ideal for cooking all types of roasts, fatty meats, bread, filled cakes.



Base: the heat comes only from the bottom of the cavity. The fan is not active. Ideal for sweet and savory pies, cobblers and pizzas. Designed to complete cooking and make food more crunchy. This symbol in gas ovens indicates the gas burner.



Fan assisted: Intense and homogeneous traditional cooking, also suitable for complex recipes. The fan is active and the heat comes from below and from above at the same time. Ventilated cooking ensures a faster and more homogeneous result, leaving fragrant foods outside and moister inside. Ideal for baked pasta, biscuits, roasts and cobblers.



Static: Traditional cooking suitable for the preparation of one dish at a time. The fan is not active and the heat comes from below and from above at the same time. Static cooking is slower and more delicate, ideal in order to get well cooked and dry dishes even inside. Ideal for cooking all types of roasts, fatty meats, bread, filled cakes.



Base: the heat comes only from the bottom of the cavity. The fan is not active. Ideal for sweet and savory pies, cobblers and pizzas. Designed to complete cooking and make food more crunchy This symbol in gas ovens indicates the gas burner.



Circulaire: it is the perfect function for cooking all types of dishes in a more delicate way. The heat comes from the back of the oven and is distributed quickly and evenly. The fan is active. It is also ideal for cooking on multiple levels without mixing smells and flavors.



Grill: Very intense heat coming only from above from a double heating element. The fan is not active. Provides excellent grilling and gratinating results. Used at the end of cooking, it gives a uniform browning to dishes.



Fan grill: very intense heat coming only from above from a double heating element. The fan is active. It allows the optimal grilling of thickest meats. Ideal for large cuts of meat.



Turbo: the heat comes from 3 directions: above, below and from the back of the oven. The fan is active. It allows quick cooking, even on several shelves without mixing the aromas. Ideal for large volumes or foods that require intense cooking.



The inner door glass: can be removed with a few quick movements for cleaning.



PYROLYSIS - AUTOMATIC CLEANING FUNCTION: the oven heats up to a temperature approaching 500 ° C and chars grease and food residues into a fine ash that can be easily wiped off with a damp cloth. At such a high temperature, the door locks automatically for safety, while the temperature of the door remains controlled so it is safe to touch User adjustable function based on the level of dirt present in the oven.



The oven cavity has 5 different cooking levels.



Ultra rapid burners: Powerful ultra rapid burners offer up to 5kw of power.



The capacity indicates the amount of usable space in the oven cavity in litres.



ECO: low energy consumption cooking: this function is particularly suitable for cooking on a single shelf with low energy consumption. It is recommended for all types of food except those that can generate a lot of moisture (for example vegetables). To achieve maximum energy savings and reduce time, it is recommended to put the food in the oven without preheating the cooking compartment.



Half grill: For rapid cooking and browning of foods. Best results can be obtained by using the top shelf for small items, the lower shelves for larger ones, such as chops or sausages. For half grill heat is generated only at the centre of the element, so is ideal for smaller quantities.



Light



All glass inner door: All glass inner door, a single flat surface which is simple to keep clean.



Side lights: Two opposing side lights increase visibility inside the oven.



The oven cavity has 4 different cooking levels.



Electronic control: Allows you to maintain temperature inside the oven with the precision 2-3 ° C. This enables to cook meals that are very sensitive to temperature changes, such as cakes, souffles, puddings.



The capacity indicates the amount of usable space in the oven cavity in litres.

Benefit (TT)

Gas hob

Gas provides permanent control of the heat source and the temperature change is immediate

Equipped with a thermocouple, the gas supply is cut off if the flame is extinguished for greater safety.

Pyrolysis

Easy oven cleaning thanks to special pyrolytic function

Buttons control

Easy and intuitive timer setting with a simple buttons

Storage compartment

More space thanks to the lower compartment, ideal for storing accessories or cooking utensils

True-convection

The best cooking performances guaranteed by ventilated circular flow

Multiple fans and heating elements guarantee the perfect aerodynamic heat flow, allowing homogeneous and quicker cooking inside the cavity.

Multilevel cooking

Several cooking levels allow maximum flexibility of use

Multilevel halogen light

Internal halogen lighting on different levels guarantees excellent visibility

Removalble inner glass

Internal door glasses are easily removable for complete cleaning

Tangential cooling

New cooling system with tangential fan and airflow from the door to the splashback

Adjustable height

Cooker top flushed with the working area thanks to adjustable feet

AirFry (AIRFRY optional accessory)

Lighter and tastier food thanks to airfry basket (optional accessory)

Cold door

During any function, the external door glass is cold, avoiding any risk of burns

Pizza stone (optional accessory)

Baking with refractory stone for soft and crispy pizza and yeast products (STONE optional accessory)

BBQ (optional accessory)

Barbecue cooking directly in the oven with the double-sided grill (BBQ optional accessory)

Isothermic Cavity

The best cooking performance at the highest energy efficiency

Single turbine

The oven has a fan equipped with a circular heating element allowing cooking with rotating heat