SCD90IMX9-1

Cooker size	90x60 cm
N. of cavities with energy label	1
Cavity heat source	ELECTRICITY
Hob type	Induction
Type of main oven	Thermo-ventilated
Cleaning system main oven	Vapor Clean
EAN code	8017709279240
Energy efficiency class	A



Aesthetics

Design	Standard	**Controls colour**	Stainless steel
Command panel finish	Stainless steel	**No. of controls**	7
Aesthetic	Classica	**Serigraphy colour**	Black
Logo	Embossed	**Display name**	Electronic 5 buttons
Colour	Stainless Steel	**Door**	Full glass
Logo position	Facia below the oven	**Glass type**	Stopsol
Finishing	Satin	**Handle**	Smeg round handle
Series	Concerto	**Handle Colour**	Brushed stainless steel
Hob colour	Stainless steel	**Storage compartment**	Door
Type of control setting hob	Control knobs	**Feet color**	Silver
Type of control knobs	Smeg Classic		

Programs / Functions main oven

No. of cooking functions 8

Traditional cooking functions

- Static
- Fan assisted
- Circulaire
- Eco
- Small grill
- Large grill
- Fan grill (large)
- Fan assisted base

Cleaning functions

 Vapor clean

Hob options



Control lock	Yes	**Limited Power Consumption Mode in W**	3700, 4800, 7400 W
Limited Power Consumption Mode	Yes		

Hob technical features



Total no. of cook zones 5

Front left - Induction - single - 2.30 kW - Booster 3.00 kW - Ø 21.0 cm

Rear left - Induction - single - 1.30 kW - Booster 1.40 kW - Ø 18.0 cm

Central - Induction - single - 2.30 kW - Booster 3.00 kW - Ø 27.0 cm

Rear right - Induction - single - 1.30 kW - Booster 1.40 kW - Ø 18.0 cm

Front right - Induction - single - 2.30 kW - Booster 3.00 kW - Ø 21.0 cm

No. of cooking zones with Booster	5	**Minimum pan diameter indication**	Yes
Automatic switch off when overheat	Yes	**Selected zone indicator**	Yes
Automatic pan detection	Yes		

Main Oven Technical Features



Fan number	2	**Removable inner door**	Yes
Net volume of the cavity	115 l	**Total no. of door glasses**	3
Gross volume, 1st cavity	129 l	**No.of thermo-reflective door glasses**	2
Cavity material	Ever Clean enamel	**Safety Thermostat**	Yes
No. of shelves	5	**Cooling system**	Tangential
Type of shelves	Metal racks	**Usable cavity space dimensions (HxWxD)**	371x724x418 mm
Light type	Halogen	**Temperature control**	Electro-mechanical
Light Power	40 W	**Lower heating element power**	1700 W
Cooking time setting	Start and Stop	**Upper heating element - Power**	1200 W
Light when oven door is open	Yes	**Grill element**	1700 W
Door opening	Flap down	**Large grill - Power**	2900 W
Removable door	Yes	**Circular heating element - Power**	2 x 1550 W
Full glass inner door	Yes	**Grill type**	Electric

Options Main Oven

Timer	Yes	**Minimum Temperature**	50 °C
End of cooking acoustic alarm	Yes	**Maximum temperature**	260 °C

Accessories included for Main Oven & Hob

Rack with back and side stop	1	**40mm deep tray**	1
20mm deep tray	1	**Grill mesh**	1

Electrical Connection

Electrical connection rating	10600 W	**Additional connection modalities**	Double and Three Phase
Current	46 A	**Frequency**	50/60 Hz
Voltage	220-240 V	**Terminal block**	5 poles
Voltage 2 (V)	380-415 V	**Plug**	Not present
Electric cable	Not included		

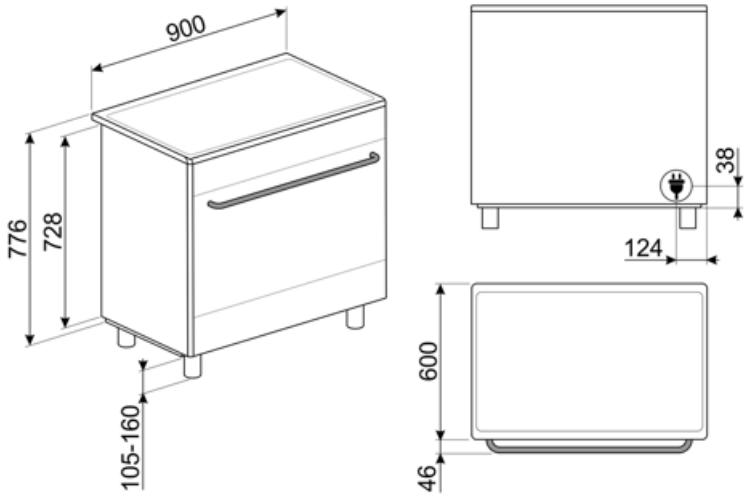

Compatible Accessories



AIRFRY9

Air fryer rack AIRFRY . Ideal for recreating traditional frying in the oven, but with fewer calories and less fat. It allows you to cook quickly and simply dishes such as French fries, fried vegetables and fish, ensuring perfect browning and crispiness.



BN920

Enamelled tray 90cm cavity, 20mm deep



GRILLPLATE

Universal griddle for induction, gas, ceramic and electric hobs. Non-stick surface ideal for cooking meat, cheese and vegetables. Dimensions: 410 x 240 mm.



GTT

Totally extractable telescopic guides (1 level), suitable for traditional ovens. Made in stainless steel, they guarantee stability and facilitate the smooth extraction of the trays.

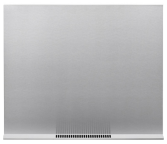

KIT90X9-1

Splashback, stainless steel, 90cm, for Concerto cookers with single MF or gas oven



KITPDQ

Height reduction feet (850mm), stainless steel, for Concerto cookers (850-881mm)



SCRP

Non-scratch hob scraper - suitable for induction and ceramic hobs

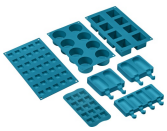

SMOLD

Set of 7 silicone moulds for ice creams, ice lollies, pralines, ice cubes or to portion food. Usable from -60°C to +230°C



BBQ9

teflon-coated aluminum grid for 90 cm cavity



BN940

Enamelled tray 90 cm, 40 mm deep



GTP

Partially extractable telescopic guides (1 level), suitable for traditional ovens. Made in stainless steel, they guarantee stability and facilitate the smooth extraction of the trays.



KIT600SNL-9

Cover strip for hob back side, depth 60mm, suitable for 90cm single oven Concerto cookers



KITH95

Height extension feet (950mm), stainless steel, suitable for Concerto cookers (911-966mm)



PALPZ

Pizza shovel with folding handle. Dimensions L31.5 x H32.5 cm. Easy and convenient to use and store. Perfect for serving pizza, bread and savory pastries in a safe and professional way.



SFLK1

Child lock



TPKPLATE

Universal plate for induction, gas, ceramic and electric hobs. Non-stick surface ideal for cooking fish, eggs and vegetables. Dimensions: 410 X 240 mm.

Symbols glossary



Power booster: option allows the zone to work at full power when very intense cooking is necessary.



Energy efficiency class A



Air cooling system: to ensure a safe surface temperatures.



ECO-logic: option allows you to restrict the power limit of the appliance real energy saving.



Fan assisted base: the mix of fan and lower heating element alone allows to finish cooking foods already cooked on the surface but not internally more quickly. This system is recommended to finish cooking foods that are already well cooked on the surface, but not internally, which therefore require a moderate higher heat. Ideal for any type of food.



Static: Traditional cooking suitable for the preparation of one dish at a time. The fan is not active and the heat comes from below and from above at the same time. Static cooking is slower and more delicate, ideal in order to get well cooked and dry dishes even inside. Ideal for cooking all types of roasts, fatty meats, bread, filled cakes.



ECO: low energy consumption cooking: this function is particularly suitable for cooking on a single shelf with low energy consumption. It is recommended for all types of food except those that can generate a lot of moisture (for example vegetables). To achieve maximum energy savings and reduce time, it is recommended to put the food in the oven without preheating the cooking compartment.



Child lock: some models are fitted with a device to lock the programme/cycle so it cannot be accidentally changed.



Installation in column: Installation in column.



Triple glazed doors: Number of glazed doors.



Ever Clean Enamel: Ever Clean enamel is applied electrostatically, corner to corner and edge to edge to prevent cracking or cracks over time. It is a particular pyrolytic enamel, resistant to acids which, in addition to being pleasantly bright, promotes greater cleaning of the oven walls, thanks to its lower porosity. It is baked at over 850 °C and slowly polymerized at a scientifically determined rate to ensure uniform depth and strength. Ever Clean enamel creates an impeccable finish both on the inside of the oven and on the trays, making the surfaces of the oven incredibly easy to maintain over time as it reduces the adhesion of fat during cooking.



Fan assisted: Intense and homogeneous traditional cooking, also suitable for complex recipes. The fan is active and the heat comes from below and from above at the same time. Ventilated cooking ensures a faster and more homogeneous result, leaving fragrant foods outside and moister inside. Ideal for baked pasta, biscuits, roasts and cobblers.



Circulaire: it is the perfect function for cooking all types of dishes in a more delicate way. The heat comes from the back of the oven and is distributed quickly and evenly. The fan is active. It is also ideal for cooking on multiple levels without mixing smells and flavors.



Grill: Very intense heat coming only from above from a double heating element. The fan is not active. Provides excellent grilling and gratinating results. Used at the end of cooking, it gives a uniform browning to dishes.

Half grill: For rapid cooking and browning of foods. Best results can be obtained by using the top shelf for small items, the lower shelves for larger ones, such as chops or sausages. For half grill heat is generated only at the centre of the element, so is ideal for smaller quantities.

Fan grill: very intense heat coming only from above from a double heating element. The fan is active. It allows the optimal grilling of thickest meats. Ideal for large cuts of meat.

Overheat protection: The safety system that automatically turns off the hob in case of overheating of the control unit.

Induction: The work of these hobs is based on the principle of electromagnetic induction. The heat is generated directly in the bottom of the pan during its contact with the hob.

All glass inner door: All glass inner door, a single flat surface which is simple to keep clean.

The inner door glass: can be removed with a few quick movements for cleaning.

Side lights: Two opposing side lights increase visibility inside the oven.

Automatic opening: some models have Automatic opening door when the cycle is finished which is a perfect solution for handle-less kitchen units as no handle is needed. For safety reasons, the door locks automatically when the machine is in use to avoid it being opened inadvertently.

The oven cavity has 5 different cooking levels.

Vapor Clean: a simple cleaning function using steam to loosen deposits in the oven cavity.

The capacity indicates the amount of usable space in the oven cavity in litres.

Knobs control