SE484EMTD

Product Family	Hob
Built-in	Ultra-low profile
Dimensions	80 cm
Power supply	Electric
Type	Ceramic
EAN code	8017709324247



Aesthetics

Aesthetics	Universal
Colour	Black
Finishing	Glass
Material	Glass
Glass Type	Ceramic
Glass edge	Straight edge
Type of control setting	VTC controls
Slider	Red
Control knobs position	Front
Logo	Silk screen
Serigraphy colour	Grey

Program / Functions

No. of ceramic cook zones	4
No. of cooking zones with booster	4
Main on/off switch	Yes
Power levels	9
Total no. of cook zones	4

Options

Standard cut out	490x745 mm
Keep warm automatic function	Yes
End cooking timer	4
Minute minder	1
End of cooking acoustic alarm	Yes
Residual time indicator	Yes
Limited Power Consumption Mode	Yes
Limited Power Consumption Mode in W	2800, 4000 W
Show Room Demo Option	Yes
Control Lock / Child Safety	Yes
Quick start	Yes

Technical Features

Front left - Ceramic - double - 2.30 kW - Ø 21.0 cm
Rear left - Ceramic - single - 1.20 kW - Ø 15.0 cm
Rear right - Ceramic - extendable - 2.20 kW - Ø 17.0 cm
Front right - Ceramic - single - 1.80 kW - Ø 18.5 cm

Automatic switch off when overheat	Yes
Automatic switch off when overflow	Yes
Residual heat indicator	Yes

Electrical Connection

Nominal power (W)	7400 W
Current	22 A
Voltage (V)	220-240 V
Voltage 2 (V)	380-415 V
Type of electric cable	Single phase
Type of electric cable	Yes, Double and Three Phase
Frequency (Hz)	50/60 Hz
Power supply cable length	150 cm
Terminal Box	6 poles
Plug	No

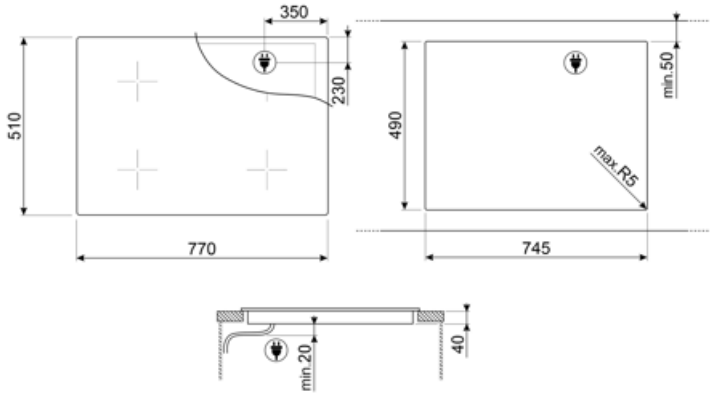

Compatible Accessories



SCRP

Induction and ceramic hobs and teppanyaki scraper

Symbols glossary



Power booster: option allows the zone to work at full power when very intense cooking is necessary.



Child lock: some models are fitted with a device to lock the programme/cycle so it cannot be accidentally changed.



Keep warm function: Keep warm function keeps the cooked food heated. In this mode the heating zone operates at a minimum capacity for 120 minutes and then turns off automatically.



Glass ceramic: The base of the hob is made glass ceramic. Heating is performed by the heating elements Hi-Light.



Quick Start function: the chosen temperature is reached faster. The heating element works at maximum power until the right temperature is reached.



Time elapsed: shows how long the cooking zone has been in use.



Compact Slider intuitive and easy to use



Ultra-low profile: Installation of product with flat edge - height of 1 mm.



ECO-logic: option allows you to restrict the power limit of the appliance real energy saving.



Overheat protection: The safety system that automatically turns off the hob in case of overheating of the control unit.



Overfill protection: The special overfill protection shuts down the stove in the presence of overflow of liquids.



Indication of residual heat: After the glass ceramic hob is switched off the residual heat indicator shows which of the heating zones still remains hot. When the temperature drops below 60 ° C, the indicator goes out.



Timer: All ceramic hobs have a timer which automatically ends cooking after a preset time.