SF4606WVCPNR

Category	45 cm
Product Family	Oven
Vitality system	Yes
Power supply	Electric
Heat source	ELECTRICITY
Cooking method	Combi Steam
Cleaning system	Vapor Clean
EAN code	8017709262945

Aesthetics

Aesthetic	Dolce Stil Novo	**Glass Type**	Eclipse
Colour	Black	**Door**	Full glass
Finishing	Glossy	**Handle**	Dolce Stil Novo
Design	Flat	**Handle Colour**	Black
Component finish	Copper	**Logo**	Applied
Material	Glass		

Controls

Display name	VivoScreen max	**No. of display languages**	11
Display technology	TFT	**Display languages**	Italiano, English (UK), Français (FR), Nederlands, Español (ES), Português (PT), Svenska, Русский, Deutsch (DE), Dansk, Polski, English (AU)
Control setting	Advanced full touch		

Programs / Functions main oven

No. of cooking functions	16
Automatic programmes	65
Customisable recipes	64

Traditional cooking functions

- Static
- Fan assisted
- Circulaire
- Turbo
- Eco
- Large grill
- Fan grill (large)
- Base
- Circulaire + bottom
- Pizza

Cooking functions with steam

- Steam
- Fan assisted
- Circulaire
- Circulaire + bottom
- Warming and re-generation
- Sous Vide

Other Steam functions

- Tank cleaning
- Water outlet
- Water input
- Descaling programme

Other functions

- Defrost by time
- Defrost by weight
- Leavening
- Keep warm
- Plate rack/warmer
- Sabbath

Cleaning functions

- Vapor Clean

Options

Time-setting options	Delay start and automatic end cooking
Minute minder	Yes
Timer	3
Controls Lock / Child Safety	Yes
Other options	Keep warm, Eco light, Language setting, Digital clock display, Brightness, Tones, Tones volume
Cooking with probe thermometer	Yes
Multi-step cooking	Yes, up to 3 steps
Smart cooking	Yes
Showroom demo option	Yes
Demo-tutorial mode	Yes
Touch guide	Yes
Chronology	Yes, the last 10 functions utilized
Rapid pre-heating	Yes
Instant GO	Yes

Technical Features

Capacity (Lt)	41 l
Minimum Temperature	30 °C
Maximum temperature	250 °C
No. of shelves	3
No. of lights	1
Light type	Halogen
User-replaceable light	Yes
Light Power	40 W
Light when door is opened	Yes
Lower heating element power	1000 W
Grill element - power	2000 W
Circular heating element - Power	1400 W
Heating suspended when door is opened	Yes
Boiler - Power	900 W
Door opening type	Standard opening

Door	Temperate door
Removable door	Yes
Full glass inner door	Yes
Removable inner door	Yes
Total no. of door glasses	3
Soft Close hinges	Yes
Cooling system	Tangential
Cooling duct	Single
Usable cavity space dimensions (HxWxD)	212x462x407 mm
Temperature control	Electronic
Cavity material	Ever clean Enamel
Water loading	Fill&Hide, automatic
Tank capacity	1,2 l
Steam stops when door is opened	Yes

Performance / Energy Label

Energy efficiency class	A+
Net volume of the cavity	41 l
Energy consumption per cycle in conventional mode	0.85 kWh
Energy consumption in conventional mode	3.06 MJ

Energy consumption in forced air convection	2.12 MJ
Energy consumption per cycle in fan-forced convection	0.59 kWh
Number of cavities	1
Energy efficiency index	81.9 %

Accessories included

Rack with back stop	1
Enamelled deep tray (40mm)	1
Insert gird	1
St/steel tray (20mm)	1

St/steel perforated deep tray (40mm)	1
Telescopic Guide rails, total Extraction (inox)	1
Temperature probe	Yes, single point
Other	Sponge/ Boiler cover/ Beaker

Electrical Connection

Voltage	220-240 V	**Nominal power**	3100 W
Plug	Not present	**Frequency (Hz)**	50/60 Hz
Current	14 A	**Power supply cable length**	115 cm

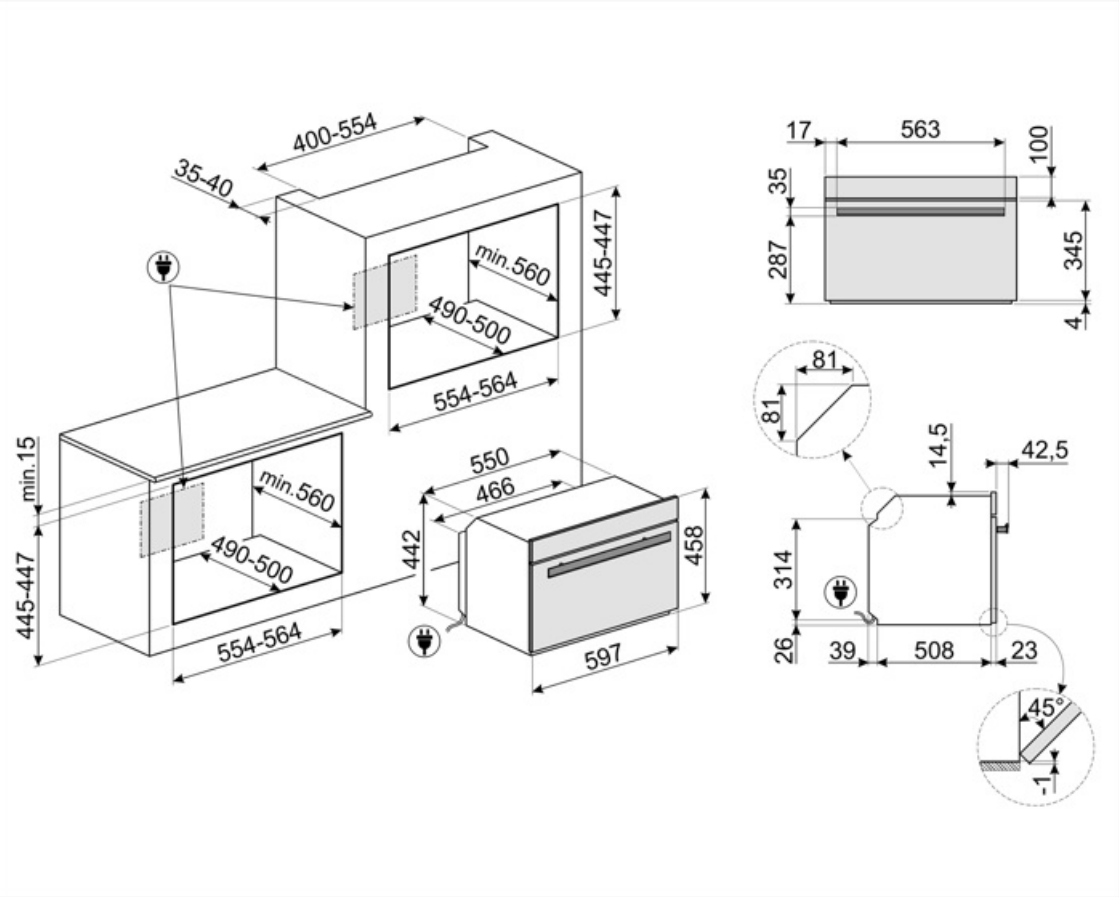

Compatible Accessories

BN620-1

Enamelled tray suitable for 45 cm and 60 cm ovens. Depth 20 mm. Perfect for a wide range of savoury and sweet baking.

BX640

Non-perforated bowl for steam oven. Capacity 2.7lt. Suitable for cooking dishes such as rice, pasta or other cereals in water or sauce. Stainless steel , H40xW455xD176 mm

PR3845N

Black cover for furniture when more ovens are installed in column

STONE2

Rectangular pizza stone without handles, suitable for 45cm and 60cm wide ovens. Dimensions W42 x H1.8 x D37.5cm. Ideal for cooking pizzas with the same results as a typical wood-fired oven. Can also be used for baking bread, focaccias and other recipes such as pies, flans or biscuits

BN640

Enamelled tray suitable for 45cm and 60cm ovens. Depth 540 mm. Perfect for cooking and roasting meat and fish in sauces. Also ideal for experimenting with lighter and crunchy side dishes

PALPZ

Pizza shovel with folding handle. Dimensions L31.5 x H32.5 cm. Easy and convenient to use and store. Perfect for serving pizza, bread and savory pastries in a safe and professional way.

PR3845X

Antifingerprint stainless steel. Cover for furniture in column installation of more ovens

Symbols glossary

Child lock: some models are fitted with a device to lock the programme/cycle so it cannot be accidentally changed.

A+: Energy efficiency class A+ helps to save up to 10% energy compared to class A. Maximum performance with minimum consumption is guaranteed.

Combi steam ovens: The steam cooking system allows to cook any type of food more gently and quickly. Variations in temperature and steam level allow you to achieve the desired gastronomic result. Steam cooking decrease the use of fat in favor of a healthier and more genuine cuisine, and also minimizes the loss of weight and volume of food during cooking. Steam cooking is perfect for cooking meats: in addition to making them very soft, it maintains their shine and makes them more succulent. Also recommended for cooking leavened doughs and bread-making: humidity in fact allows the dough to grow and develop during cooking before creating the external crust. The result is a lighter and more digestible dough, recognizable by the larger alveolation. It is also suitable for defrosting quickly, for heating foods without hardening or drying them and for naturally desalting salted foods.

Air cooling system: to ensure a safe surface temperatures.

Defrost by time: Manual defrost function. At the end of the set duration, the function stops.

Defrost by weight: Automatic defrost function. You choose the type of food to defrost from the available categories (MEAT - FISH - BREAD - DESSERTS). After entering the weight of the food, the oven automatically defines the time required for proper defrosting.

Descaling function: Is essential to remove excess deposits of limestone in the tank and allow the proper operation of the product. The need to perform this operation is signaled by the product itself.

The 6.3" VIVOscreen Max display is the most complete and advanced colour touch interface available for the automatic management of firing programmes such as Delta T, Multi-step and SameTime firing.

Triple glazed doors: Number of glazed doors.

Automatic lighting deactivation: For greater energy savings, the lighting turns off automatically after one minute from the start of cooking. The option can be disabled via the settings menu. In this case the light will remain on for the entire duration of cooking.

Electric

Ever Clean Enamel: Ever Clean enamel is applied electrostatically, corner to corner and edge to edge to prevent cracking or cracks over time. It is a particular pyrolytic enamel, resistant to acids which, in addition to being pleasantly bright, promotes greater cleaning of the oven walls, thanks to its lower porosity. It is baked at over 850 °C and slowly polymerized at a scientifically determined rate to ensure uniform depth and strength. Ever Clean enamel creates an impeccable finish both on the inside of the oven and on the trays, making the surfaces of the oven incredibly easy to maintain over time as it reduces the adhesion of fat during cooking.

A FULL STEAM oven has 3 steam COMBINATION cooking functions available, and it is also possible to use it to cook with PURE steam only. The steam is adjustable between 30% and 70% and there is the option of 100% pure steam if required. The water is loaded into the oven before cooking via an automatic loading tube. The oven calculates the exact amount of water required for the desired cooking function, up to 1.2lt. Water is introduced into the cavity, and becomes steam during cooking. Continuous steam is generated based on the setting at the start of cooking.

Fan assisted: Intense and homogeneous traditional cooking, also suitable for complex recipes. The fan is active and the heat comes from below and from above at the same time. Ventilated cooking ensures a faster and more homogeneous result, leaving fragrant foods outside and moister inside. Ideal for baked pasta, biscuits, roasts and cobblers.

Static: Traditional cooking suitable for the preparation of one dish at a time. The fan is not active and the heat comes from below and from above at the same time. Static cooking is slower and more delicate, ideal in order to get well cooked and dry dishes even inside. Ideal for cooking all types of roasts, fatty meats, bread, filled cakes.

Base: the heat comes only from the bottom of the cavity. The fan is not active. Ideal for sweet and savory pies, cobblers and pizzas. Designed to complete cooking and make food more crunchy. This symbol in gas ovens indicates the gas burner.

Circulaire with lower element: The addition of the lower element adds extra heat at the base for food which requires extra cooking.

Circulaire: it is the perfect function for cooking all types of dishes in a more delicate way. The heat comes from the back of the oven and is distributed quickly and evenly. The fan is active. It is also ideal for cooking on multiple levels without mixing smells and flavors.

ECO: low energy consumption cooking: this function is particularly suitable for cooking on a single shelf with low energy consumption. It is recommended for all types of food except those that can generate a lot of moisture (for example vegetables). To achieve maximum energy savings and reduce time, it is recommended to put the food in the oven without preheating the cooking compartment.

Grill: Very intense heat coming only from above from a double heating element. The fan is not active. Provides excellent grilling and gratinating results. Used at the end of cooking, it gives a uniform browning to dishes.

Fan grill: very intense heat coming only from above from a double heating element. The fan is active. It allows the optimal grilling of thickest meats. Ideal for large cuts of meat.

Pizza function: Specific function for cooking pizza in a pan. It allows to obtain a pizza that is soft inside and crispy outside with the topping perfectly cooked, not dry and not burnt.

Sous Vide Cooking: Steam function for perfect cooking of sous vide dishes. Enhances the taste of dishes and keeps their appearance and nutrients unaltered. Vacuum cooking (Sous Vide) made with the help of a steam oven is also an incredible healthy and genuine type of cooking. The Sous Vide cooking technique allows heat to be efficiently transferred from the steam to the food, avoiding the loss of flavor due to oxidation and the evaporation of nutrients and moisture during cooking. Sous Vide cooking also allows better control over the cooking of food compared to traditional methods, ensuring uniform cooking results. It also allows cooking at a lower temperature than traditional cooking.

Steam cooking: it`s a natural way of cooking for any kind of products, from vegetables to desserts, to preserve the nutritional and organoleptic properties of ingredients. Ideal for cooking without fat, to heat up food without drying. Steam is ideal for simultaneous cooking of meals that require different cooking times.

Fun assisted + Steam: intense and homogeneous cooking. The fan is active and the heat comes from below and from above at the same time. The addition of steam allows better preservation of the organoleptic properties of food and improves the internal cooking of foods, which are more crunchy and digestible. Ideal for roast veal, roast duck and for cooking whole fish.

Circulaire + Steam: The addition of steam to thermoventilated cooking allows better preservation of the organoleptic properties of food. The heat comes from the back of the oven and is distributed quickly and evenly. The fan is active. It is the perfect function for cooking all types of dishes in a more delicate way. It is also ideal for cooking on multiple levels without mixing smells and flavors. Ideal for preparing roasts, chicken and baked goods such as leavened cakes and bread.

FUN_STEAM_OTHER_WATER_IN_OUT_72dpi

Reheat: This function can reheat precooked dishes, without becoming dry or hard.

Turbo: the heat comes from 3 directions: above, below and from the back of the oven. The fan is active. It allows quick cooking, even on several shelves without mixing the aromas. Ideal for large volumes or foods that require intense cooking.

Compact appliances with a height of 45 cm - perfect solution to meet the functional requirements of kitchen sets of small height. Available in several types and in different styles.

All glass inner door: All glass inner door, a single flat surface which is simple to keep clean.

The inner door glass: can be removed with a few quick movements for cleaning.

KEEP_WARM_72dpi

Side lights: Two opposing side lights increase visibility inside the oven.

Plate rack warming: function for heating or keeping dishes warm. Place the baking tray on the lowest shelf and stack the dishes to be heated.

Temperature probe: with the temperature probe it is possible to perfectly cooking roasts, loins, meat of various cuts and sizes. In fact, the probe improve food cooking, thanks to the precise control of the temperature at the heart of the dish. The core temperature of the food is measured by a special sensor located inside the tip. When the instant temperature reaches the target temperature set by the user, cooking is finished

Air at 40°C provides the perfect environment for proving yeast type dough mixes. Simply select the function and place dough in the cavity for allotted

Rapid preheating: cooking is preceded by the preheating phase which allows the cooking compartment to reach the set temperature. This option reduces the time by up to 50%.

SABBATH: function that allows to cook food respecting Judaism's day of rest provisions.

The oven cavity has 3 different cooking levels.

Appliances with Wi-Fi connectivity. Via SmegConnect App is possible to monitor and remotely control appliances through smartphone and tablet (iOS and Android).

Multistep Cooking: It is possible to set up to 3 cooking phases during the same recipe. Cooking technology, function, time and temperature can be varied. At the end of a phase, the following will start automatically.

Telescopic rails: allow you to pull out the dish and check it without having to remove it from the oven entirely.

Vapor Clean: a simple cleaning function using steam to loosen deposits in the oven cavity.

The capacity indicates the amount of usable space in the oven cavity in litres.

Keep warm: the function allows to keep cooked food warm.

Option designed to solve any doubts More than 100 pop-ups, which can be triggered with a long touch on any icon, provide information on the use of the display and cooking.

Smart Cooking is the perfect recipe for every occasion. Meat, fish, pasta, desserts, etc . up to 150 automatic recipes that allow to make any preparation in a single click. Decide your menu and then the oven takes care of the rest.

Soft close: all models are equipped with advanced function of smooth closing of the door, which allows the device to close smoothly and quietly.

To guarantee the optimal functioning of the appliance, it is suggested to carry out the tank cleaning roughly once every 2-3 months.

Electronic control: Allows you to maintain temperature inside the oven with the precision 2-3 ° C. This enables to cook meals that are very sensitive to temperature changes, such as cakes, souffles, puddings.

The capacity indicates the amount of usable space in the oven cavity in litres.

Wi-Fi connectivity

INSTANT GO: activating this option allow to start cooking immediately. Preheating is included in the cooking time and the oven will gradually reach the desired temperature Particularly suitable for frozen foods.