SF4920MCN1

Category	45 cm
Product Family	Oven
Power supply	Electric
Heat source	ELECTRICITY
Cooking method	Combi Microwave
Cleaning system	Vapor Clean
EAN code	8017709241629



Aesthetics

Aesthetic	Victoria	**Door**	With panel
Colour	Black	**Handle**	Victoria
Design	Rounded	**Handle Colour**	Steel effect
Material	Painted material	**Logo**	Applied
Glass Type	Clear	**Control knobs**	Victoria
Serigraphy colour	White	**Controls colour**	Steel effect
Serigraphy type	Symbols		

Controls

Display technology	LCD	**No. of controls**	2
Control setting	Knobs		

Programs / Functions main oven

No. of cooking functions	13
Automatic programmes	20

Traditional cooking functions

- Static
- Fan assisted
- Circulaire
- Turbo
- Eco
- Large grill
- Fan grill (large)
- Fan assisted base

Microwave functions

- Microwave
- Fan assisted
- Circulaire
- Microwave + grill
- Warming and re-generation

Other functions

- Defrost by time
- Defrost by weight
- Leavening
- Sabbath

Cleaning functions

- Vapor Clean

Options

Time-setting options	Delay start and automatic end cooking	**Other options**	Keep warm, Eco light, Quick start
Minute minder	Yes	**Showroom demo option**	Yes
Controls Lock / Child Safety	Yes	**Rapid pre-heating**	Yes

Technical Features

Capacity (Lt)	40 l	**Door opening type**	Standard opening
Minimum Temperature	30 °C	**Door**	Temperate door
Maximum temperature	250 °C	**Total no. of door glasses**	3
No. of shelves	3	**Microwave stops when door is opened**	Yes
No. of lights	2	**Soft Close hinges**	Yes
Light type	Halogen	**Cooling system**	Tangential
Light Power	40 W	**Cooling duct**	Single
Light when door is opened	Yes	**Usable cavity space dimensions (HxWxD)**	212x462x407 mm
Lower heating element power	1000 W	**Temperature control**	Electronic
Grill element - power	2000 W	**Cavity material**	Ever clean Enamel
Circular heating element - Power	1400 W	**Microwave screen protection**	Yes
Heating suspended when door is opened	Yes		

Performance / Energy Label

Net volume of the cavity	40 l

Number of cavities	1	**Microwave effective power**	1000 W

Accessories included

Rack with back stop	1	**Glass tray**	1
Insert gird	1		

Electrical Connection

Voltage	220-240 V	**Nominal power**	3100 W
Plug	Not present	**Frequency (Hz)**	50 Hz
Current	14 A	**Power supply cable length**	115 cm

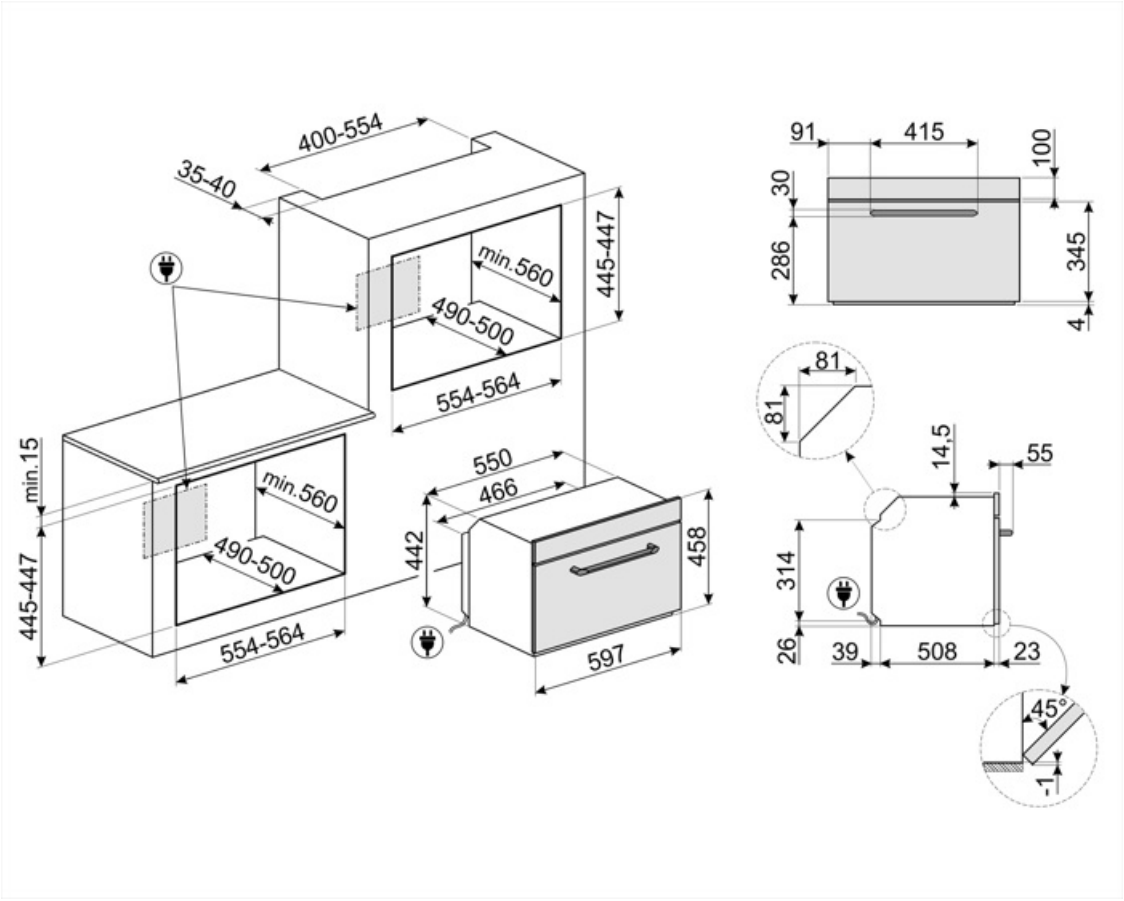

Compatible Accessories



BN620-1

Enamelled tray suitable for 45 cm and 60 cm ovens. Depth 20 mm. Perfect for a wide range of savoury and sweet baking.



GTP

Partially extractable telescopic guides (1 level), suitable for traditional ovens. Made in stainless steel, they guarantee stability and facilitate the smooth extraction of the trays.



PALPZ

Pizza shovel with folding handle. Dimensions L31.5 x H32.5 cm. Easy and convenient to use and store. Perfect for serving pizza, bread and savory pastries in a safe and professional way.



STONE2

Rectangular pizza stone without handles, suitable for 45cm and 60cm wide ovens. Dimensions W42 x H1.8 x D37.5cm. Ideal for cooking pizzas with the same results as a typical wood-fired oven. Can also be used for baking bread, focaccias and other recipes such as pies, flans or biscuits



BN640

Enamelled tray suitable for 45cm and 60cm ovens. Depth 540 mm. Perfect for cooking and roasting meat and fish in sauces. Also ideal for experimenting with lighter and crunchy side dishes



GTT

Totally extractable telescopic guides (1 level), suitable for traditional ovens. Made in stainless steel, they guarantee stability and facilitate the smooth extraction of the trays.



PR3845X

Antifingerprint stainless steel. Cover for furniture in column installation of more ovens

Symbols glossary



Child lock: some models are fitted with a device to lock the programme/cycle so it cannot be accidentally changed.



Air cooling system: to ensure a safe surface temperatures.



Defrost by weight: Automatic defrost function. You choose the type of food to defrost from the available categories (MEAT - FISH - BREAD - DESSERTS). After entering the weight of the food, the oven automatically defines the time required for proper defrosting.



Automatic lighting deactivation: For greater energy savings, the lighting turns off automatically after one minute from the start of cooking. The option can be disabled via the settings menu. In this case the light will remain on for the entire duration of cooking.



Ever Clean Enamel: Ever Clean enamel is applied electrostatically, corner to corner and edge to edge to prevent cracking or cracks over time. It is a particular pyrolytic enamel, resistant to acids which, in addition to being pleasantly bright, promotes greater cleaning of the oven walls, thanks to its lower porosity. It is baked at over 850 °C and slowly polymerized at a scientifically determined rate to ensure uniform depth and strength. Ever Clean enamel creates an impeccable finish both on the inside of the oven and on the trays, making the surfaces of the oven incredibly easy to maintain over time as it reduces the adhesion of fat during cooking.



Fan assisted: Intense and homogeneous traditional cooking, also suitable for complex recipes. The fan is active and the heat comes from below and from above at the same time. Ventilated cooking ensures a faster and more homogeneous result, leaving fragrant foods outside and moister inside. Ideal for baked pasta, biscuits, roasts and cobblers.



Circulaire: it is the perfect function for cooking all types of dishes in a more delicate way. The heat comes from the back of the oven and is distributed quickly and evenly. The fan is active. It is also ideal for cooking on multiple levels without mixing smells and flavors.



Combination microwave: This oven allows to combine two different ways of cooking (Traditional with microwaves). Combined ovens increase cooking opportunities,while providing maximum flexibility of household appliances.



Defrost by time: Manual defrost function. At the end of the set duration, the function stops.



Triple glazed doors: Number of glazed doors.



Electric



Fan assisted base: the mix of fan and lower heating element alone allows to finish cooking foods already cooked on the surface but not internally more quickly. This system is recommended to finish cooking foods that are already well cooked on the surface, but not internally, which therefore require a moderate higher heat. Ideal for any type of food.



Static: Traditional cooking suitable for the preparation of one dish at a time. The fan is not active and the heat comes from below and from above at the same time. Static cooking is slower and more delicate, ideal in order to get well cooked and dry dishes even inside. Ideal for cooking all types of roasts, fatty meats, bread, filled cakes.



ECO: low energy consumption cooking: this function is particularly suitable for cooking on a single shelf with low energy consumption. It is recommended for all types of food except those that can generate a lot of moisture (for example vegetables). To achieve maximum energy savings and reduce time, it is recommended to put the food in the oven without preheating the cooking compartment.

Grill: Very intense heat coming only from above from a double heating element. The fan is not active. Provides excellent grilling and gratinating results. Used at the end of cooking, it gives a uniform browning to dishes.

Fan grill: very intense heat coming only from above from a double heating element. The fan is active. It allows the optimal grilling of thickest meats. Ideal for large cuts of meat.

Microwave: Penetrating straight into the food, microwaves cook very quickly and with considerable energy savings. Suitable for cooking without fat, they are also able to thaw and heat food without altering its original appearance and aroma. The microwave function can also be combined with conventional functions with all the resulting advantages. Ideal for all types of food.

Cooking with the simultaneous use of the heating element in combination with fan and microwave supply.

Microwave + grill element: The use of the grill results in a perfect browning of the surface of the food. The action of microwaves allows instead of cooking in a short time the internal part of the food.

Fan combined with traditional cooking, where heat is generated from above and below, provides uniform heat. Adding the microwave function allows the same cooking results in less time.

This function can reheat precooked dishes, without becoming dry or hard.

Turbo: the heat comes from 3 directions: above, below and from the back of the oven. The fan is active. It allows quick cooking, even on several shelves without mixing the aromas. Ideal for large volumes or foods that require intense cooking.

Compact appliances with a height of 45 cm - perfect solution to meet the functional requirements of kitchen sets of small height. Available in several types and in different styles.

KEEP WARM

Side lights: Two opposing side lights increase visibility inside the oven.

ECO-logic: option allows you to restrict the power limit of the appliance real energy saving.

Air at 40°C provides the perfect environment for proving yeast type dough mixes. Simply select the function and place dough in the cavity for allotted

Rapid preheating: cooking is preceded by the preheating phase which allows the cooking compartment to reach the set temperature. This option reduces the time by up to 50%.

SABBATH: function that allows to cook food respecting Judaism's day of rest provisions.

The oven cavity has 3 different cooking levels.

Soft close: all models are equipped with advanced function of smooth closing of the door, which allows the device to close smoothly and quietly.

Electronic control: Allows you to maintain temperature inside the oven with the precision 2-3 ° C. This enables to cook meals that are very sensitive to temperature changes, such as cakes, souffles, puddings.

Tilting grill: the tilting grill can be easily unhooked to move the heating element and clean the roof of the appliance in one simple step.

Vapor Clean: a simple cleaning function using steam to loosen deposits in the oven cavity.

The capacity indicates the amount of usable space in the oven cavity in litres.

The capacity indicates the amount of usable space in the oven cavity in litres.