SF6301TVX



Category	60cm Single Ovens
Product Family	Oven
Power supply	Electric
Heat source	Electric
Cooking method	Thermo-ventilated
Cleaning system	Vapor Clean
EAN code	8017709282141

Aesthetics

Aesthetics	Classic	**Serigraphy type**	Symbols
Colour	Stainless steel	**Door**	With 2 horizontal strips
Finishing	Fingerproof	**Handle**	Classic
Design	Flat	**Handle Colour**	Stainless steel
Material	Stainless steel	**Logo**	Embossed
Type of steel	Brushed	**Control knobs**	Classic
Glass Type	Eclipse	**Controls colour**	Steel effect
Serigraphy colour	Black		

Controls

Display name	CompactScreen	**Control setting**	Control knobs
Display technology	LCD	**No. of controls**	2

Programs / Functions

No. of cooking functions	10

Traditional cooking functions

- Static
- Fan assisted
- Ciculaire
- Turbo (circulaire + bottom + upper + fan)
- ECO
- Large grill
- Fan grill (large)
- Base
- Circulaire + bottom
- Pizza

Other functions

- Defrost by time
- Proving
- Sabbath

Cleaning functions

- Vapor Clean

Options

Time-setting options	Delay start and automatic end cooking	**Other options**	Keep warm
Minute minder	Yes	**Rapid pre-heating**	Yes
Timer	1		

Technical Features

Capacity (Lt)	70 l	**Heating suspended when door is opened**	Yes
Minimum Temperature	30 °C	**Door opening type**	Standard opening
Maximum temperature	280 °C	**Door**	Temperate door
Shelf positions	5	**Removable door**	Yes
No. of lights	1	**Full glass inner door**	Yes
Light type	Halogen	**Removable inner door**	Yes
User-replaceable light	Yes	**Total no. of door glasses**	3
Light power	40 W	**Cooling system**	Tangential
Light when door is opened	Yes	**Cooling duct**	Single
Lower heating element power	1200 W		

Grill element - power	1800 W	**Usable cavity space dimensions (HxWxD)**	360x460x425 mm
Circular heating element - Power	2000 W	**Temperature control**	Electronic
		Cavity material	Easy clean enamel

Performance / Energy Label

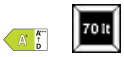

Energy efficiency class	A+	**Energy consumption in forced air convection**	2,45 MJ
Net volume of the cavity	70 litres	**Energy consumption per cycle in fan-forced convection**	0,68 kWh
Energy consumption per cycle in conventional mode	1,13 kWh	**Number of cavities**	1
Energy consumption in conventional mode	4,07 MJ	**Energy efficiency index**	81 %

Accessories Included

Chrome shelf	1	**Extra deep enamelled tray (40mm)**	1

Electrical Connection

Voltage	220-240 V	**Nominal power (W)**	3000 W
Plug	No	**Frequency (Hz)**	50/60 Hz
Current	13 A	**Power supply cable length**	150 cm

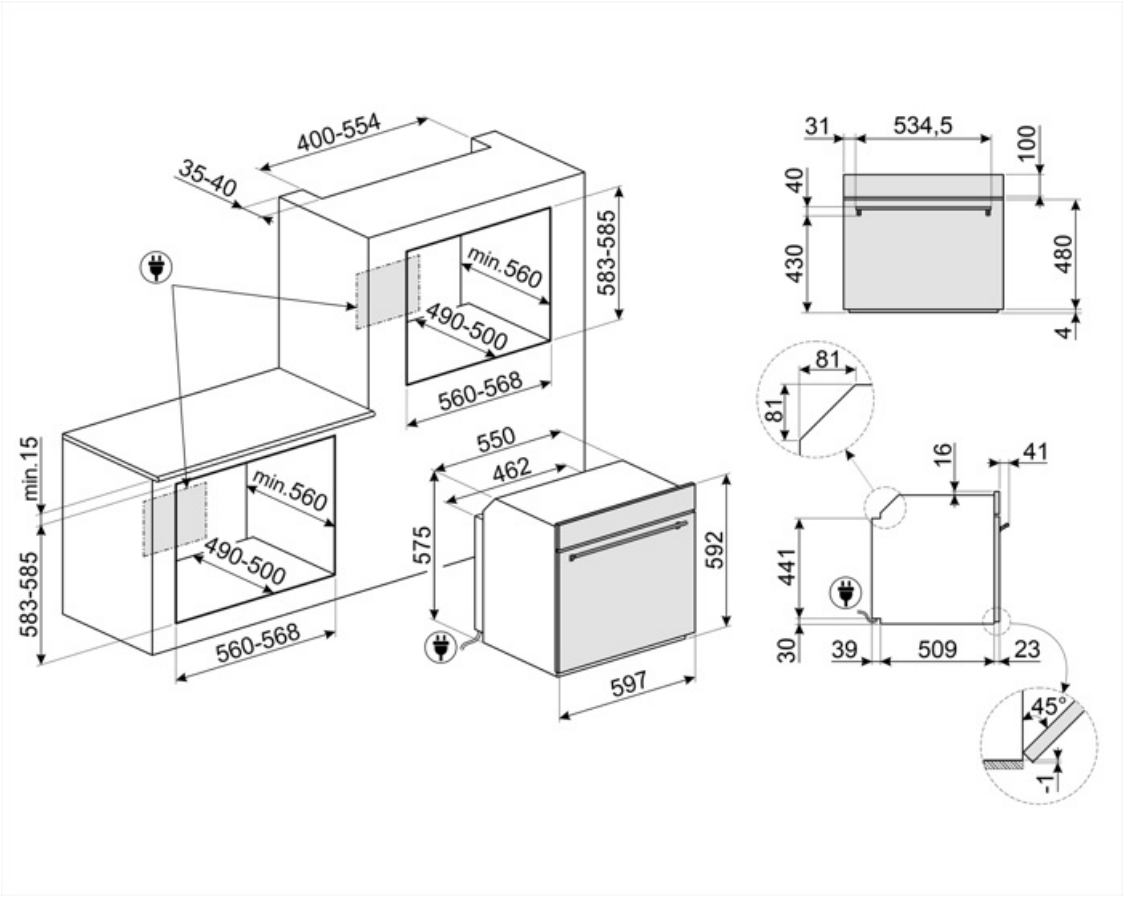
400-554
35-40
583-585
min.560
490-500
560-568
min.15
583-585
min.560
490-500
560-568
550
462
575
592
597
31
534,5
100
40
430
480
4
81
81
16
41
441
30
39
509
23
45°
1

Compatible Accessories



BN620-1

Enamelled tray, 20mm deep



BN640

Enamelled tray, 40mm deep



GTP

Partially extractable telescopic guides (1 level) Extraction: 300 mm Material: Stainless steel AISI 430 polished



GTT

Totally extractable telescopic guides (1 level) Extraction: 433 mm Material: Stainless steel AISI 430 polished



PALPZ

Pizza shovel with fold away handle width: 315mm length : 325mm



PR3845X

Antifingerprint stainless steel. Cover for furniture in column installation of more ovens



STONE2

Rectangular pizza stone without handles, suitable for 45cm and 60cm wide ovens. Dimensions W42 x H1.8 x D37.5cm. Ideal for cooking pizzas with the same results as a typical wood-fired oven. Can also be used for baking bread, focaccias and other recipes such as pies, flans or biscuits

Symbols glossary



A+: Energy efficiency class A+ helps to save up to 10% energy compared to class A. Maximum performance with minimum consumption is guaranteed.



Defrost by time: with this function the time of thawing of foods are determined automatically.



Triple glazed doors: Number of glazed doors.



Enamel interior: The enamel interior of all Smeg ovens have a special antacid lining which helps keep the interior clean by reducing the amount of cooking grease adhering to it.



Upper and lower element only: a traditional cooking method best suited for single items located in the centre of the oven. the top pf the oven will always be hottest. Ideal for roast, fruit cakes, bread etc.



Circulaire with lower element: The addition of the lower element adds extra heat at the base for food which requires extra cooking.



ECO: The combination of the grill, fan and lower element is particularly suitable for cooking small quantities of food.



Fan with grill element: The fan reduces the fierce heat from the grill, providing an excellent method of grilling various foods, chops, steaks, sausages etc. giving even browning and heat distribution, without drying out the food. The top two levels recommended for use, and the lower part of the oven can be used to keep items warm at the same time, an excellent facility when cooking a grilled breakfast. Half grill (centre portion only) is ideal for small quantities of food.



Air cooling system: to ensure a safe surface temperatures.



With a simple and intuitive interface, the COMPACTscreen provides a pleasant user experience, thanks to the interaction with the knobs.



Electric



Fan with upper and lower elements: The elements combined with the fan aim to provide more uniform heat, a similar method to conventional cooking, so pre-heat is required. Most suitable for items requiring slow cooking methods.



Lower heating element only: This function is ideal for foods that require extra base temperature without browning, e.g. pastry dishes, pizza. Also suitable for slow cooking of stews and casseroles.



Circulaire: The combination of the fan and circular element around it gives a hot air cooking method. This provides many benefits including no preheat if cook time is more than 20 minutes, no flavour transfer when cooking different foods at the same time, less energy, and shorter cook times. Good for all types of food.



Grill element: Using of grill gives excellent results when cooking meat of medium and small portions, especially when combined with a rotisserie (where possible). Also ideal for cooking sausages and bacon.



Pizza function: The simultaneous operation of three elements ensures an optimum cooking facility when used with the Smeg pizza stone.

Circulaire with upper and lower elements: The use of the fan with both elements allows food to be cooked quickly and effectively, ideal for large joints that require thorough cooking. It offers a similar result to rotisserie, moving the heat around the food, instead of moving the food itself, enabling any size or shape to be cooked.



The inner door glass: can be removed with a few quick movements for cleaning.



Side lights: Two opposing side lights increase visibility inside the oven.



Rapid preheat: The rapid preheat function can be used to reach the selected temperature in just a few minutes.



The oven cavity has 5 different cooking levels.



Vapor Clean: a simple cleaning function using steam to loosen deposits in the oven cavity.



The capacity indicates the amount of usable space in the oven cavity in litres.



All glass inner door: All glass inner door, a single flat surface which is simple to keep clean.



Keep warm: This function allows you to keep precooked foods warm.



Air at 40°C provides the perfect environment for proving yeast type dough mixes. Simply select the function and place dough in the cavity for allotted



Sabbath: This function allows you to cook food whilst respecting the provisions of the Jewish day of rest.



Electronic control: Allows you to maintain temperature inside the oven with the precision 2-3 ° C. This enables to cook meals that are very sensitive to temperature changes, such as cakes, souffles, puddings.



The capacity indicates the amount of usable space in the oven cavity in litres.