SF6400TB



Category	60 cm
Product Family	Oven
Power supply	Electric
Heat source	ELECTRICITY
Cooking method	Thermo-ventilated
Cleaning system	Vapor Clean
EAN code	8017709324902

Aesthetics

Aesthetic	Selezione	**Serigraphy type**	Symbols
Colour	Black	**Door**	Full glass
Finishing	Glossy	**Handle**	Selection squared
Design	Flat	**Handle Colour**	Black
Material	Glass	**Logo**	Silk screen
Type of steel	Brushed	**Control knobs**	Cucina restyling
Glass Type	Clear	**Controls colour**	Black
Serigraphy colour	Grey		

Controls

Display name	DigiScreen	**Control setting**	Knobs & touch buttons
Display technology	LED	**No. of controls**	2

Programs / Functions main oven

No. of cooking functions 8

Traditional cooking functions

- Static
- Fan assisted
- Circulaire
- Turbo
- Eco
- Large grill
- Fan grill (large)
- Base

Other functions

Defrost by time

Cleaning functions

Vapor Clean

Options

Time-setting options	Delay start and automatic end cooking	**Timer**	1
Minute minder	Yes	**Rapid pre-heating**	Yes

Technical Features

Capacity (Lt)	70 l	**Circular heating element - Power**	2000 W
Cavity	Sares	**Heating suspended when door is opened**	Yes
Minimum Temperature	60 °C	**Door opening type**	Standard opening
Maximum temperature	250 °C	**Door**	Temperate door
No. of shelves	5	**Removable door**	Yes
N. of fans	1	**Full glass inner door**	Yes
No. of lights	1	**Removable inner door**	Yes
Light type	Halogen	**Total no. of door glasses**	3
User-replaceable light	Yes	**Chimney**	Fixed
Light Power	40 W	**Cooling system**	Tangential
Light when door is opened	Yes	**Cooling duct**	Single
Lower heating element power	1200 W	**Speed Reduction Cooling System**	Yes
Upper heating element - Power	1000 W	**Usable cavity space dimensions (HxWxD)**	360x460x425 mm
Grill element - power	1700 W	**Temperature control**	Electro-mechanical
Large grill - Power	2700 W	**Cavity material**	Ever clean Enamel

Performance / Energy Label

Energy efficiency class	A	**Energy consumption in forced air convection**	2,88 MJ
Net volume of the cavity	70 l	**Energy consumption per cycle in fan-forced convection**	0,80 kWh
Energy consumption per cycle in conventional mode	1,15 kWh	**Number of cavities**	1
Energy consumption in conventional mode	4,14 MJ	**Energy efficiency index**	95,2 %

Accessories included

Rack with back stop	1	**Enamelled deep tray (40mm)**	1

Electrical Connection

Voltage	220-240 V	**Nominal power**	3000 W
Plug	Not present	**Frequency (Hz)**	50/60 Hz
Current	13 A	**Power supply cable length**	150 cm

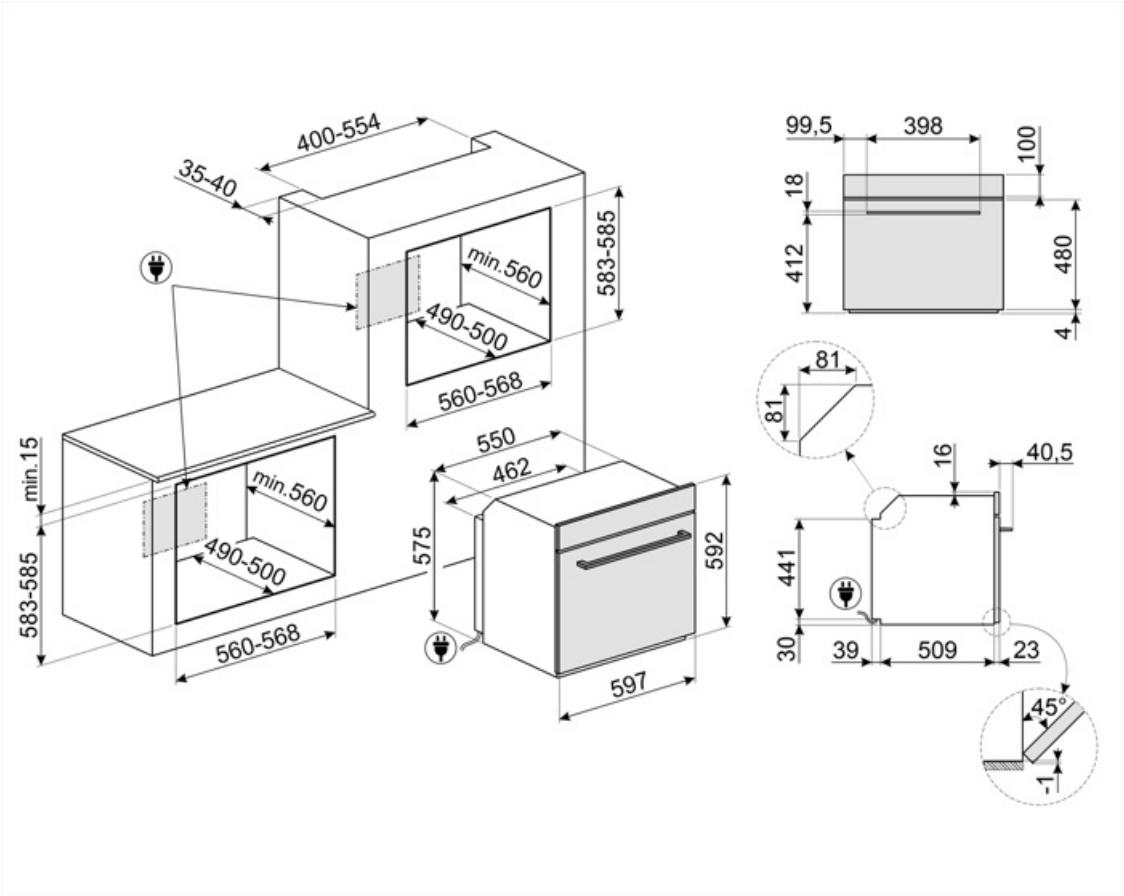

Compatible Accessories



BN620-1

Enamelled tray suitable for 45 cm and 60 cm ovens. Depth 20 mm. Perfect for a wide range of savoury and sweet baking.



GTP

Partially extractable telescopic guides (1 level), suitable for traditional ovens. Made in stainless steel, they guarantee stability and facilitate the smooth extraction of the trays.



PALPZ

Pizza shovel with folding handle. Dimensions L31.5 x H32.5 cm. Easy and convenient to use and store. Perfect for serving pizza, bread and savory pastries in a safe and professional way.



STONE2

Rectangular pizza stone without handles, suitable for 45cm and 60cm wide ovens. Dimensions W42 x H1.8 x D37.5cm. Ideal for cooking pizzas with the same results as a typical wood-fired oven. Can also be used for baking bread, focaccias and other recipes such as pies, flans or biscuits



BN640

Enamelled tray suitable for 45cm and 60cm ovens. Depth 540 mm. Perfect for cooking and roasting meat and fish in sauces. Also ideal for experimenting with lighter and crunchy side dishes



GTT

Totally extractable telescopic guides (1 level), suitable for traditional ovens. Made in stainless steel, they guarantee stability and facilitate the smooth extraction of the trays.



PR3845X

Antifingerprint stainless steel. Cover for furniture in column installation of more ovens

Symbols glossary



Energy efficiency class A



Defrost by time: Manual defrost function. At the end of the set duration, the function stops.



Triple glazed doors: Number of glazed doors.



Ever Clean Enamel: Ever Clean enamel is applied electrostatically, corner to corner and edge to edge to prevent cracking or cracks over time. It is a particular pyrolytic enamel, resistant to acids which, in addition to being pleasantly bright, promotes greater cleaning of the oven walls, thanks to its lower porosity. It is baked at over 850 °C and slowly polymerized at a scientifically determined rate to ensure uniform depth and strength. Ever Clean enamel creates an impeccable finish both on the inside of the oven and on the trays, making the surfaces of the oven incredibly easy to maintain over time as it reduces the adhesion of fat during cooking.



Static: Traditional cooking suitable for the preparation of one dish at a time. The fan is not active and the heat comes from below and from above at the same time. Static cooking is slower and more delicate, ideal in order to get well cooked and dry dishes even inside. Ideal for cooking all types of roasts, fatty meats, bread, filled cakes.



Circulaire: it is the perfect function for cooking all types of dishes in a more delicate way. The heat comes from the back of the oven and is distributed quickly and evenly. The fan is active. It is also ideal for cooking on multiple levels without mixing smells and flavors.



Grill: Very intense heat coming only from above from a double heating element. The fan is not active. Provides excellent grilling and gratinating results. Used at the end of cooking, it gives a uniform browning to dishes.



Turbo: the heat comes from 3 directions: above, below and from the back of the oven. The fan is active. It allows quick cooking, even on several shelves without mixing the aromas. Ideal for large volumes or foods that require intense cooking.



Air cooling system: to ensure a safe surface temperatures.



4.3 inch display with LED technology, usability with knobs + 3 touch keys



Electric



Fan assisted: Intense and homogeneous traditional cooking, also suitable for complex recipes. The fan is active and the heat comes from below and from above at the same time. Ventilated cooking ensures a faster and more homogeneous result, leaving fragrant foods outside and moister inside. Ideal for baked pasta, biscuits, roasts and cobblers.



Base: the heat comes only from the bottom of the cavity. The fan is not active. Ideal for sweet and savory pies, cobblers and pizzas. Designed to complete cooking and make food more crunchy. This symbol in gas ovens indicates the gas burner.



ECO: low energy consumption cooking: this function is particularly suitable for cooking on a single shelf with low energy consumption. It is recommended for all types of food except those that can generate a lot of moisture (for example vegetables). To achieve maximum energy savings and reduce time, it is recommended to put the food in the oven without preheating the cooking compartment.



Fan grill: very intense heat coming only from above from a double heating element. The fan is active. It allows the optimal grilling of thickest meats. Ideal for large cuts of meat.



All glass inner door: All glass inner door, a single flat surface which is simple to keep clean.



The inner door glass: can be removed with a few quick movements for cleaning.



Rapid preheating: cooking is preceded by the preheating phase which allows the cooking compartment to reach the set temperature. This option reduces the time by up to 50%.



Vapor Clean: a simple cleaning function using steam to loosen deposits in the oven cavity.



The capacity indicates the amount of usable space in the oven cavity in litres.



Side lights: Two opposing side lights increase visibility inside the oven.



The oven cavity has 5 different cooking levels.



The capacity indicates the amount of usable space in the oven cavity in litres.