SF6905X1



Category	60 cm
Product Family	Oven
Power supply	Electric
Heat source	ELECTRICITY
Cooking method	Thermo-ventilated
Cleaning system	Vapor Clean
EAN code	8017709241513

Aesthetics

Aesthetic	Victoria	**Serigraphy type**	Symbols
Colour	Stainless Steel	**Door**	With panel
Finishing	Fingerproof	**Handle**	Victoria
Design	Rounded	**Handle Colour**	Steel effect
Material	Stainless steel	**Logo**	Applied
Type of steel	Brushed	**Control knobs**	Victoria
Glass Type	Clear	**Controls colour**	Steel effect
Serigraphy colour	Black		

Controls

Control setting	Knobs	**No. of controls**	3

Programs / Functions main oven

No. of cooking functions 8

Traditional cooking functions

- Static
- Fan assisted
- Circulaire
- Turbo
- Eco
- Large grill
- Fan grill (large)
- Base

Cleaning functions

Vapor Clean

Options

Time-setting options	Automatic end cooking	**Minute minder**	Yes

Technical Features



Capacity (Lt)	70 l	**Heating suspended when door is opened**	Yes
Minimum Temperature	60 °C	**Door opening type**	Standard opening
Maximum temperature	250 °C	**Door**	Temperate door
No. of shelves	5	**Removable door**	Yes
N. of fans	1	**Full glass inner door**	Yes
No. of lights	2	**Removable inner door**	Yes
Light type	Halogen	**Total no. of door glasses**	3
Light Power	40 W	**Cooling system**	Tangential
Light when door is opened	Yes	**Cooling duct**	Double
Lower heating element power	1200 W	**Speed Reduction Cooling System**	Yes
Upper heating element - Power	1000 W	**Usable cavity space dimensions (HxWxD)**	360x460x425 mm
Grill element - power	1700 W	**Temperature control**	Electro-mechanical
Large grill - Power	2700 W	**Cavity material**	Ever clean Enamel
Circular heating element - Power	2000 W		

Performance / Energy Label



Energy efficiency class	A	**Energy consumption in forced air convection**	2,88 MJ
Net volume of the cavity	70 l	**Energy consumption per cycle in fan-forced convection**	0,80 kWh
Energy consumption per cycle in conventional mode	1,15 kWh	**Number of cavities**	1
Energy consumption in conventional mode	4,14 MJ	**Energy efficiency index**	95,2 %

Accessories included

Rack with back stop	1	**Enamelled deep tray (40mm)**	1

Electrical Connection

Voltage	220-240 V	**Nominal power**	3000 W
Plug	Not present	**Frequency (Hz)**	50/60 Hz
Current	13 A	**Power supply cable length**	150 cm

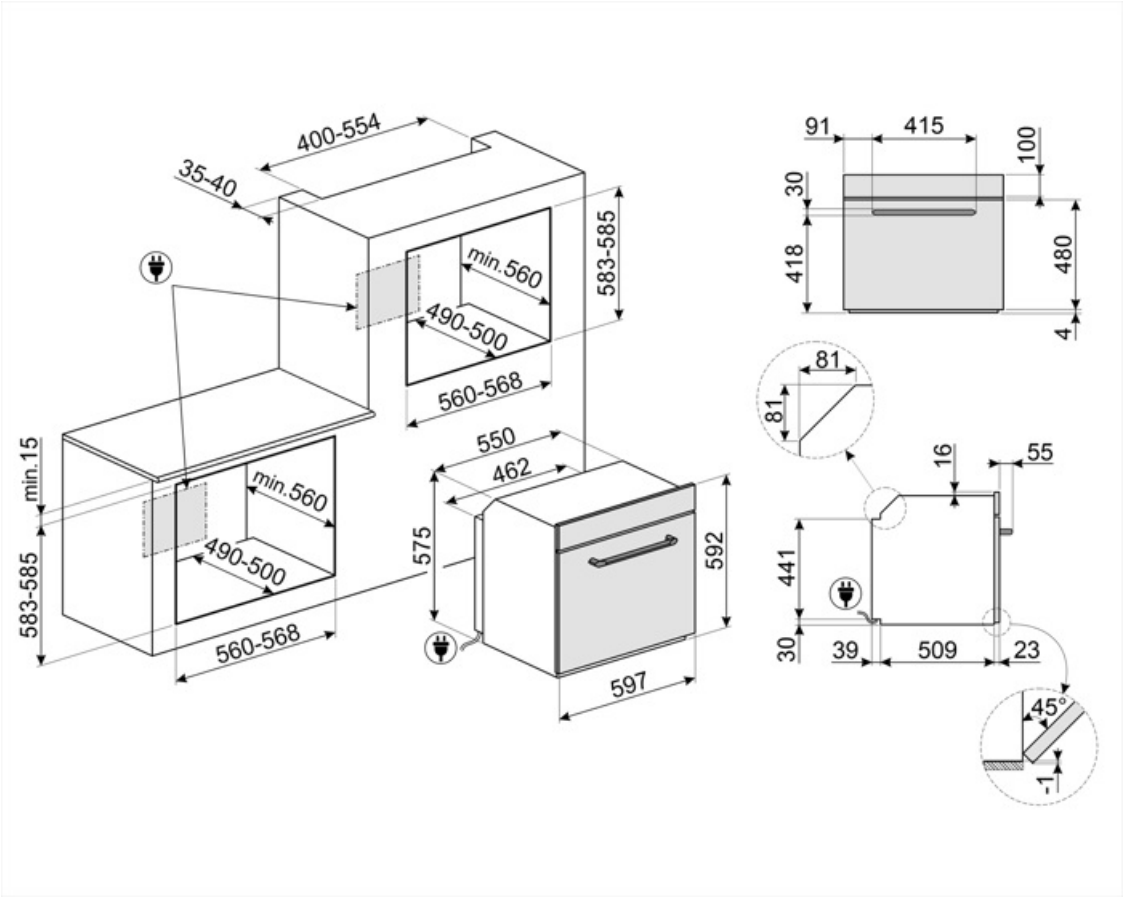

Compatible Accessories



BN620-1

Enamelled tray suitable for 45 cm and 60 cm ovens. Depth 20 mm. Perfect for a wide range of savoury and sweet baking.



GTP

Partially extractable telescopic guides (1 level), suitable for traditional ovens. Made in stainless steel, they guarantee stability and facilitate the smooth extraction of the trays.



PALPZ

Pizza shovel with folding handle. Dimensions L31.5 x H32.5 cm. Easy and convenient to use and store. Perfect for serving pizza, bread and savory pastries in a safe and professional way.



STONE2

Rectangular pizza stone without handles, suitable for 45cm and 60cm wide ovens. Dimensions W42 x H1.8 x D37.5cm. Ideal for cooking pizzas with the same results as a typical wood-fired oven. Can also be used for baking bread, focaccias and other recipes such as pies, flans or biscuits



BN640

Enamelled tray suitable for 45cm and 60cm ovens. Depth 540 mm. Perfect for cooking and roasting meat and fish in sauces. Also ideal for experimenting with lighter and crunchy side dishes



GTT

Totally extractable telescopic guides (1 level), suitable for traditional ovens. Made in stainless steel, they guarantee stability and facilitate the smooth extraction of the trays.



PR3845X

Antifingerprint stainless steel. Cover for furniture in column installation of more ovens

Alternative products



SF6905P1

Cream



SF6905N1

Black

Symbols glossary



Energy efficiency class A



Triple glazed doors: Number of glazed doors.



Ever Clean Enamel: Ever Clean enamel is applied electrostatically, corner to corner and edge to edge to prevent cracking or cracks over time. It is a particular pyrolytic enamel, resistant to acids which, in addition to being pleasantly bright, promotes greater cleaning of the oven walls, thanks to its lower porosity. It is baked at over 850 °C and slowly polymerized at a scientifically determined rate to ensure uniform depth and strength. Ever Clean enamel creates an impeccable finish both on the inside of the oven and on the trays, making the surfaces of the oven incredibly easy to maintain over time as it reduces the adhesion of fat during cooking.



Fan assisted: Intense and homogeneous traditional cooking, also suitable for complex recipes. The fan is active and the heat comes from below and from above at the same time. Ventilated cooking ensures a faster and more homogeneous result, leaving fragrant foods outside and moister inside. Ideal for baked pasta, biscuits, roasts and cobblers.



Base: the heat comes only from the bottom of the cavity. The fan is not active. Ideal for sweet and savory pies, cobblers and pizzas. Designed to complete cooking and make food more crunchy. This symbol in gas ovens indicates the gas burner.



ECO: low energy consumption cooking: this function is particularly suitable for cooking on a single shelf with low energy consumption. It is recommended for all types of food except those that can generate a lot of moisture (for example vegetables). To achieve maximum energy savings and reduce time, it is recommended to put the food in the oven without preheating the cooking compartment.



Fan grill: very intense heat coming only from above from a double heating element. The fan is active. It allows the optimal grilling of thickest meats. Ideal for large cuts of meat.



All glass inner door: All glass inner door, a single flat surface which is simple to keep clean.



Air cooling system: to ensure a safe surface temperatures.



Electric



Fingerprint proof stainless steel: Fingerprint proof stainless steel keeps stainless steel looking as good as new.



Static: Traditional cooking suitable for the preparation of one dish at a time. The fan is not active and the heat comes from below and from above at the same time. Static cooking is slower and more delicate, ideal in order to get well cooked and dry dishes even inside. Ideal for cooking all types of roasts, fatty meats, bread, filled cakes.



Circulaire: it is the perfect function for cooking all types of dishes in a more delicate way. The heat comes from the back of the oven and is distributed quickly and evenly. The fan is active. It is also ideal for cooking on multiple levels without mixing smells and flavors.



Grill: Very intense heat coming only from above from a double heating element. The fan is not active. Provides excellent grilling and gratinating results. Used at the end of cooking, it gives a uniform browning to dishes.



Turbo: the heat comes from 3 directions: above, below and from the back of the oven. The fan is active. It allows quick cooking, even on several shelves without mixing the aromas. Ideal for large volumes or foods that require intense cooking.



The inner door glass: can be removed with a few quick movements for cleaning.

Side lights: Two opposing side lights increase visibility inside the oven.

Vapor Clean: a simple cleaning function using steam to loosen deposits in the oven cavity.

The capacity indicates the amount of usable space in the oven cavity in litres.

The oven cavity has 5 different cooking levels.

The capacity indicates the amount of usable space in the oven cavity in litres.