SF9302TN

Category	90cm
Product Family	Oven
Power supply	Electric
Heat source	ELECTRICITY
Cooking method	Thermo-ventilated
Cleaning system	Vapor Clean
EAN code	8017709351335



Aesthetics

Aesthetic	Classica	**Serigraphy type**	Symbols
Colour	Matt Black	**Door**	With 2 horizontal strips
Finishing	Matt	**Handle**	Classic
Design	Flat	**Handle Colour**	Inox
Material	Stainless steel	**Logo**	Embossed
Glass Type	Eclipse	**Control knobs**	Classic
Serigraphy colour	Silver	**Controls colour**	Steel effect

Controls

Display name	EvoScreen	**Control setting**	Knobs & touch buttons
Display technology	LCD	**No. of controls**	2

Programs / Functions

No. of cooking functions	10

Traditional cooking functions

- Static
- Fan assisted
- Circulaire
- Turbo
- Eco
- Large grill
- Fan grill (large)
- Fan assisted base
- Circulaire + bottom
- Pizza

Other functions

- Defrost by time
- Leavening
- Sabbath

Cleaning functions

- Vapor Clean

Options

Time-setting options	Delay start and automatic end cooking	**Other options**	Keep warm, Eco light, Brightness, Tones
Minute minder	Yes	**Showroom demo option**	Yes
Controls Lock / Child Safety	Yes	**Rapid pre-heating**	Yes

Technical Features

Capacity (Lt)	115 l	**Circular heating element 2 - Power**	1550 W
Minimum Temperature	25 °C	**Heating suspended when door is opened**	Yes
Maximum temperature	280 °C	**Door opening type**	Standard opening
No. of shelves	5	**Door**	Temperate door
N. of fans	2	**Removable door**	Yes
No. of lights	2	**Full glass inner door**	Yes
Light type	Halogen	**Removable inner door**	Yes
User-replaceable light	Yes	**Total no. of door glasses**	3
Light Power	40 W	**Cooling system**	Tangential
Light when door is opened	Yes	**Cooling duct**	Double
Lower heating element power	1700 W	**Speed Reduction Cooling System**	Yes
Upper heating element - Power	1200 W	**Usable cavity space dimensions (HxWxD)**	371x724x418 mm
Grill element - power	1700 W	**Temperature control**	Electronic
Large grill - Power	2900 W	**Cavity material**	Ever clean Enamel
Circular heating element - Power	1550 W		

Performance / Energy Label



Energy efficiency class	A+	**Energy consumption in forced air convection**	4,50 MJ
Net volume of the cavity	115 l	**Energy consumption per cycle in fan-forced convection**	1,25 kWh
Energy consumption per cycle in conventional mode	0,82 kWh	**Number of cavities**	1
Energy consumption in conventional mode	2,95 MJ	**Energy efficiency index**	79,6 %

Accessories Included



Rack with back stop	2	**Insert gird**	1
Enamelled tray (20mm)	1	**Telescopic Guide rails, partial Extraction**	1
Enamelled deep tray (40mm)	1		

Electrical Connection

Voltage	220-240 V	**Nominal power**	3200 W
Plug	Not present	**Frequency (Hz)**	50/60 Hz
Current	14 A	**Power supply cable length**	115 cm

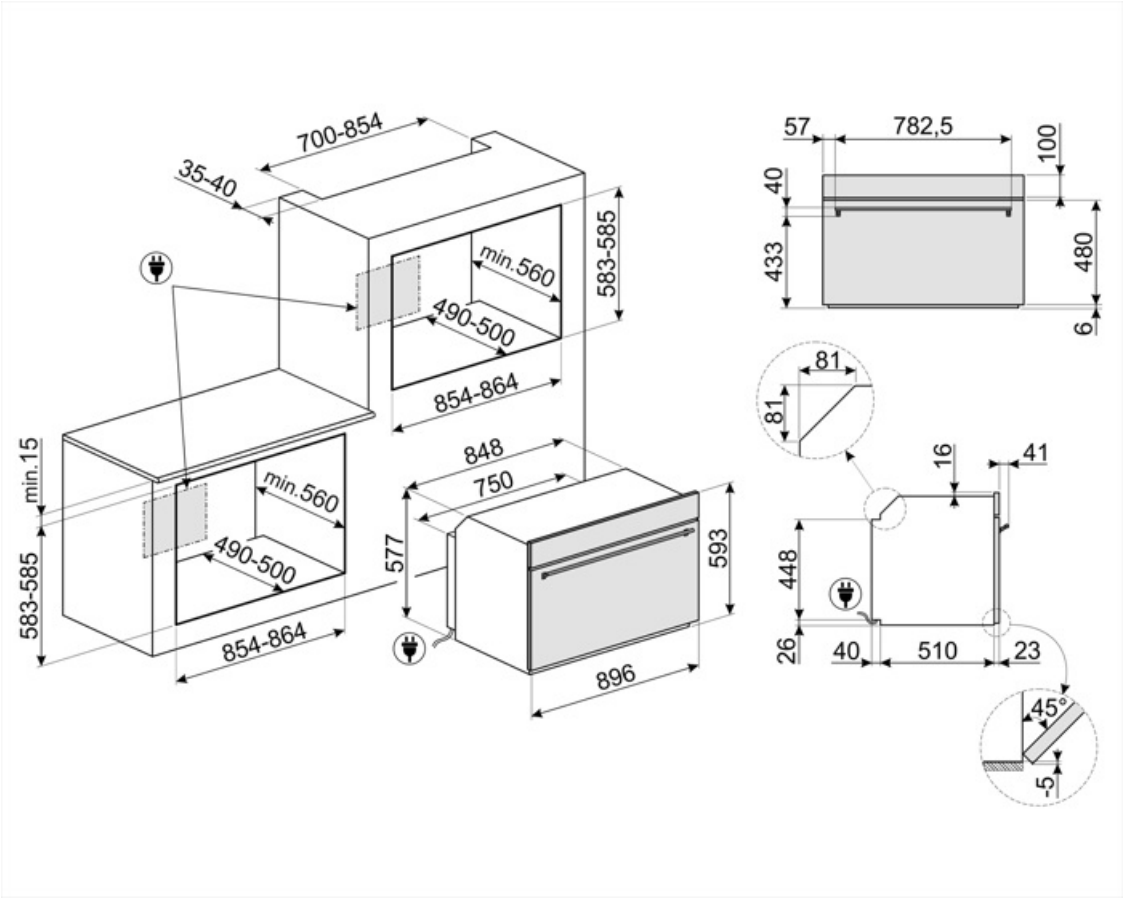
700-854
35-40
583-585
min.560
490-500
854-864
min.15
min.560
490-500
583-585
854-864
848
750
577
593
896
57
782,5
100
40
433
480
6
81
81
16
41
448
26
40
510
23
45°
5

Compatible Accessories



GTP

Partially extractable telescopic guides (1 level), suitable for traditional ovens. Made in stainless steel, they guarantee stability and facilitate the smooth extraction of the trays.



GTT

Totally extractable telescopic guides (1 level), suitable for traditional ovens. Made in stainless steel, they guarantee stability and facilitate the smooth extraction of the trays.

Symbols glossary



Child lock: some models are fitted with a device to lock the programme/cycle so it cannot be accidentally changed.



Air cooling system: to ensure a safe surface temperatures.



Triple glazed doors: Number of glazed doors.



Electric



Fingerprint proof stainless steel: Fingerprint proof stainless steel keeps stainless steel looking as good as new.



Fan assisted: Intense and homogeneous traditional cooking, also suitable for complex recipes. The fan is active and the heat comes from below and from above at the same time. Ventilated cooking ensures a faster and more homogeneous result, leaving fragrant foods outside and moister inside. Ideal for baked pasta, biscuits, roasts and cobblers.



Circulaire with lower element: The addition of the lower element adds extra heat at the base for food which requires extra cooking.



A+: Energy efficiency class A+ helps to save up to 10% energy compared to class A. Maximum performance with minimum consumption is guaranteed.



Defrost by time: Manual defrost function. At the end of the set duration, the function stops.



Automatic lighting deactivation: For greater energy savings, the lighting turns off automatically after one minute from the start of cooking The option can be disabled via the settings menu. In this case the light will remain on for the entire duration of cooking.



Ever Clean Enamel: Ever Clean enamel is applied electrostatically, corner to corner and edge to edge to prevent cracking or cracks over time. It is a particular pyrolytic enamel, resistant to acids which, in addition to being pleasantly bright, promotes greater cleaning of the oven walls, thanks to its lower porosity. It is baked at over 850 ° C and slowly polymerized at a scientifically determined rate to ensure uniform depth and strength Ever Clean enamel creates an impeccable finish both on the inside of the oven and on the trays, making the surfaces of the oven incredibly easy to maintain over time as it reduces the adhesion of fat during cooking



Fan assisted base: the mix of fan and lower heating element alone allows to finish cooking foods already cooked on the surface but not internally more quickly. This system is recommended to finish cooking foods that are already well cooked on the surface, but not internally, which therefore require a moderate higher heat. Ideal for any type of food.



Static: Traditional cooking suitable for the preparation of one dish at a time. The fan is not active and the heat comes from below and from above at the same time. Static cooking is slower and more delicate, ideal in order to get well cooked and dry dishes even inside. Ideal for cooking all types of roasts, fatty meats, bread, filled cakes.



Circulaire: it is the perfect function for cooking all types of dishes in a more delicate way. The heat comes from the back of the oven and is distributed quickly and evenly The fan is active. It is also ideal for cooking on multiple levels without mixing smells and flavors.

ECO: low energy consumption cooking: this function is particularly suitable for cooking on a single shelf with low energy consumption. It is recommended for all types of food except those that can generate a lot of moisture (for example vegetables). To achieve maximum energy savings and reduce time, it is recommended to put the food in the oven without preheating the cooking compartment

Fan grill: very intense heat coming only from above from a double heating element The fan is active. It allows the optimal grilling of thickest meats. Ideal for large cuts of meat.

Turbo: the heat comes from 3 directions: above, below and from the back of the oven The fan is active. It allows quick cooking, even on several shelves without mixing the aromas. Ideal for large volumes or foods that require intense cooking.

The inner door glass: can be removed with a few quick movements for cleaning.

Side lights: Two opposing side lights increase visibility inside the oven.

Rapid preheating: cooking is preceded by the preheating phase which allows the cooking compartment to reach the set temperature. This option reduces the time by up to 50%.

The oven cavity has 5 different cooking levels.

Electronic control: Allows you to maintain temperature inside the oven with the precision 2-3 ° C. This enables to cook meals that are very sensitive to temperature changes, such as cakes, souffles, puddings.

The capacity indicates the amount of usable space in the oven cavity in litres.

The new EVOscreen display is enhanced with new, optimised colour graphics: 5 touch buttons control functions and parameters in an extremely simple way.

Grill: Very intense heat coming only from above from a double heating element. The fan is not active. Provides excellent grilling and gratinating results. Used at the end of cooking, it gives a uniform browning to dishes.

Pizza function: Specific function for cooking pizza in a pan. It allows to obtain a pizza that is soft inside and crispy outside with the topping perfectly cooked, not dry and not burnt.

All glass inner door: All glass inner door, a single flat surface which is simple to keep clean.

KEEP_WARM_72dpi

Air at 40°C provides the perfect environment for proving yeast type dough mixes. Simply select the function and place dough in the cavity for allotted

SABBATH: function that allows to cook food respecting Judaism's day of rest provisions.

Telescopic rails: allow you to pull out the dish and check it without having to remove it from the oven entirely.

Vapor Clean: a simple cleaning function using steam to loosen deposits in the oven cavity.

The capacity indicates the amount of usable space in the oven cavity in litres.