SFP6301TVN



Category	60 cm
Product Family	Oven
Power supply	Electric
Heat source	ELECTRICITY
Cooking method	Thermo-ventilated
Cleaning system	Pyrolitic
EAN code	8017709310233

Aesthetics

Aesthetic	Classica	**Serigraphy type**	Symbols
Colour	Matt Black	**Door**	With 2 horizontal strips
Finishing	Matt	**Handle**	Classic
Design	Flat	**Handle Colour**	All black special edition
Material	Painted material	**Logo**	Silk screen
Glass Type	Eclipse	**Control knobs**	Classic
Serigraphy colour	Silver	**Controls colour**	Matt black

Controls

Display name	CompactScreen	**Control setting**	Knobs
Display technology	LCD	**No. of controls**	2

Programs / Functions main oven

No. of cooking functions	10

Traditional cooking functions

- Static
- Fan assisted
- Circulaire
- Turbo
- Eco
- Large grill
- Fan grill (large)
- Base
- Circulaire + bottom
- Pizza

Other functions

- Defrost by time
- Leavening
- Sabbath

Cleaning functions

- Pirolysis

Options

Time-setting options	Delay start and automatic end cooking	**Other options**	Keep warm
Minute minder	Yes	**Showroom demo option**	Yes
Timer	1	**Rapid pre-heating**	Yes
Controls Lock / Child Safety	Yes		

Technical Features

Capacity (Lt)	70 l	**Heating suspended when door is opened**	Yes
Cavity	Sares	**Door opening type**	Standard opening
Minimum Temperature	30 °C	**Door**	Cool
Maximum temperature	280 °C	**Removable door**	Yes
No. of shelves	5	**Full glass inner door**	Yes
N. of fans	1	**Removable inner door**	Yes
No. of lights	1	**Total no. of door glasses**	4
Light type	Halogen	**Cooling system**	Tangential
User-replaceable light	Yes	**Cooling duct**	Double
Light Power	40 W	**Speed Reduction Cooling System**	Yes
Light when door is opened	Yes	**Door Lock During Pyrolisis**	Yes
Lower heating element power	1200 W	**Usable cavity space dimensions (HxWxD)**	360x444x425 mm
Grill element - power	1800 W	**Temperature control**	Electronic
Circular heating element - Power	2000 W		

Cavity material	Ever clean Enamel

Performance / Energy Label

Energy efficiency class	A+	**Energy consumption in forced air convection**	2,45 MJ
Net volume of the cavity	70 l	**Energy consumption per cycle in fan-forced convection**	0,68 kWh
Energy consumption per cycle in conventional mode	1,09 kWh	**Number of cavities**	1
Energy consumption in conventional mode	3,92 MJ	**Energy efficiency index**	81 %

Accessories included

Rack with back and side stop	1	**Enamelled deep tray (40mm)**	1

Electrical Connection

Voltage	220-240 V	**Nominal power**	3000 W
Plug	Not present	**Frequency (Hz)**	50/60 Hz
Current	13 A	**Power supply cable length**	150 cm

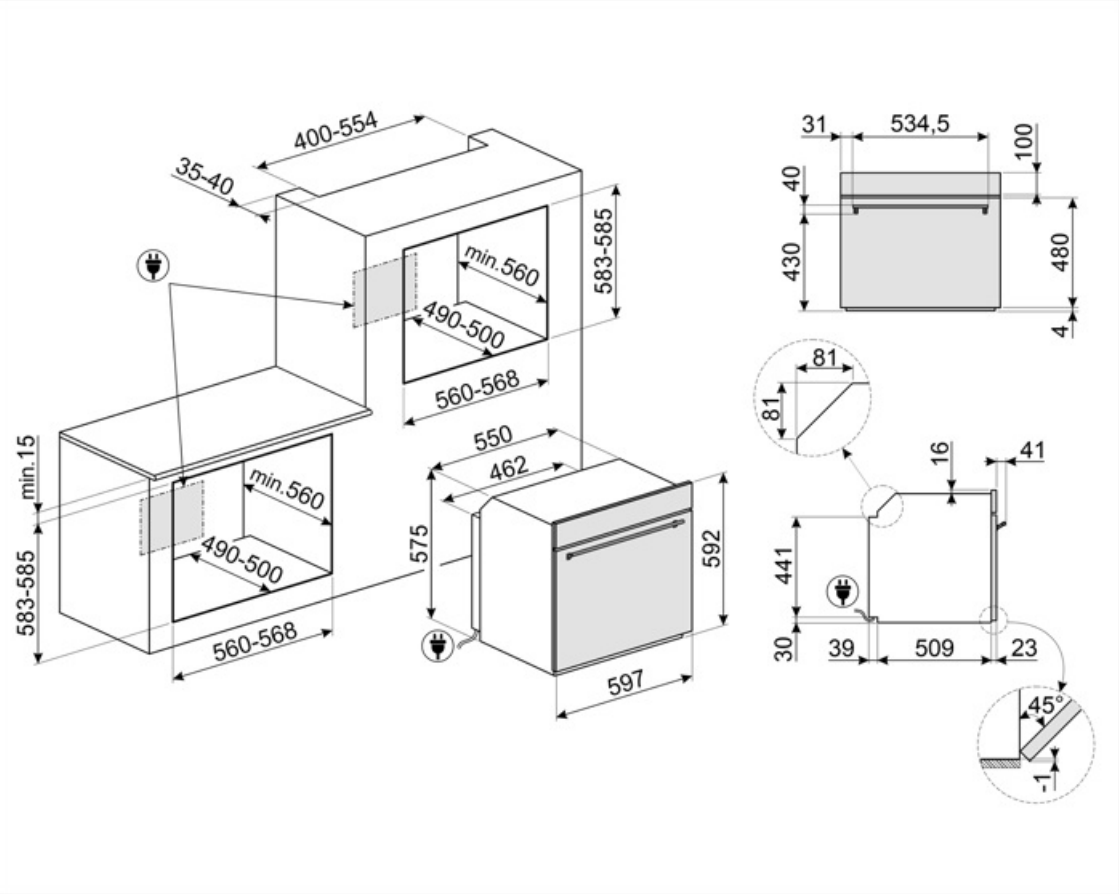

Compatible Accessories



BN620-1

Enamelled tray suitable for 45 cm and 60 cm ovens. Depth 20 mm. Perfect for a wide range of savoury and sweet baking.



GTP

Partially extractable telescopic guides (1 level), suitable for traditional ovens. Made in stainless steel, they guarantee stability and facilitate the smooth extraction of the trays.



PALPZ

Pizza shovel with folding handle. Dimensions L31.5 x H32.5 cm. Easy and convenient to use and store. Perfect for serving pizza, bread and savory pastries in a safe and professional way.



STONE2

Rectangular pizza stone without handles, suitable for 45cm and 60cm wide ovens. Dimensions W42 x H1.8 x D37.5cm. Ideal for cooking pizzas with the same results as a typical wood-fired oven. Can also be used for baking bread, focaccias and other recipes such as pies, flans or biscuits



BN640

Enamelled tray suitable for 45cm and 60cm ovens. Depth 540 mm. Perfect for cooking and roasting meat and fish in sauces. Also ideal for experimenting with lighter and crunchy side dishes



GTT

Totally extractable telescopic guides (1 level), suitable for traditional ovens. Made in stainless steel, they guarantee stability and facilitate the smooth extraction of the trays.



PR3845N

Black cover for furniture when more ovens are installed in column

Symbols glossary



Child lock: some models are fitted with a device to lock the programme/cycle so it cannot be accidentally changed.



A+: Energy efficiency class A+ helps to save up to 10% energy compared to class A. Maximum performance with minimum consumption is guaranteed.



Air cooling system: to ensure a safe surface temperatures.



Defrost by time: Manual defrost function. At the end of the set duration, the function stops.



Quadruple glazed: Number of glazed doors.



Electric



Ever Clean Enamel: Ever Clean enamel is applied electrostatically, corner to corner and edge to edge to prevent cracking or cracks over time. It is a particular pyrolytic enamel, resistant to acids which, in addition to being pleasantly bright, promotes greater cleaning of the oven walls, thanks to its lower porosity. It is baked at over 850 °C and slowly polymerized at a scientifically determined rate to ensure uniform depth and strength. Ever Clean enamel creates an impeccable finish both on the inside of the oven and on the trays, making the surfaces of the oven incredibly easy to maintain over time as it reduces the adhesion of fat during cooking.



Fresh Touch: Most of Smeg ovens have a "cool door." Thanks to the combination of tangential cooling and internal heat-reflecting glasses, the temperature on the outer surface of the door is maintained below 50° C. In addition to providing safety, this system protects the sides of the furniture from overheating by the oven.



Fan assisted: Intense and homogeneous traditional cooking, also suitable for complex recipes. The fan is active and the heat comes from below and from above at the same time. Ventilated cooking ensures a faster and more homogeneous result, leaving fragrant foods outside and moister inside. Ideal for baked pasta, biscuits, roasts and cobblers.



Static: Traditional cooking suitable for the preparation of one dish at a time. The fan is not active and the heat comes from below and from above at the same time. Static cooking is slower and more delicate, ideal in order to get well cooked and dry dishes even inside. Ideal for cooking all types of roasts, fatty meats, bread, filled cakes.



Base: the heat comes only from the bottom of the cavity. The fan is not active. Ideal for sweet and savory pies, cobblers and pizzas. Designed to complete cooking and make food more crunchy. This symbol in gas ovens indicates the gas burner.



Circulaire with lower element: The addition of the lower element adds extra heat at the base for food which requires extra cooking.



Circulaire: it is the perfect function for cooking all types of dishes in a more delicate way. The heat comes from the back of the oven and is distributed quickly and evenly. The fan is active. It is also ideal for cooking on multiple levels without mixing smells and flavors.



ECO: low energy consumption cooking: this function is particularly suitable for cooking on a single shelf with low energy consumption. It is recommended for all types of food except those that can generate a lot of moisture (for example vegetables). To achieve maximum energy savings and reduce time, it is recommended to put the food in the oven without preheating the cooking compartment.



Grill: Very intense heat coming only from above from a double heating element. The fan is not active. Provides excellent grilling and gratinating results. Used at the end of cooking, it gives a uniform browning to dishes.



Fan grill: very intense heat coming only from above from a double heating element. The fan is active. It allows the optimal grilling of thickest meats. Ideal for large cuts of meat.



Pizza function: Specific function for cooking pizza in a pan. It allows to obtain a pizza that is soft inside and crispy outside with the topping perfectly cooked, not dry and not burnt.



Turbo: the heat comes from 3 directions: above, below and from the back of the oven. The fan is active. It allows quick cooking, even on several shelves without mixing the aromas. Ideal for large volumes or foods that require intense cooking.



All glass inner door: All glass inner door, a single flat surface which is simple to keep clean.



The inner door glass: can be removed with a few quick movements for cleaning.



KEEP WARM



Side lights: Two opposing side lights increase visibility inside the oven.



PYROLYSIS - AUTOMATIC CLEANING FUNCTION: the oven heats up to a temperature approaching 500 ° C and chars grease and food residues into a fine ash that can be easily wiped off with a damp cloth. At such a high temperature, the door locks automatically for safety, while the temperature of the door remains controlled so it is safe to touch User adjustable function based on the level of dirt present in the oven.



Air at 40°C provides the perfect environment for proving yeast type dough mixes. Simply select the function and place dough in the cavity for allotted



Rapid preheating: cooking is preceded by the preheating phase which allows the cooking compartment to reach the set temperature. This option reduces the time by up to 50%.



SABBATH: function that allows to cook food respecting Judaism's day of rest provisions.



The oven cavity has 5 different cooking levels.



Electronic control: Allows you to maintain temperature inside the oven with the precision 2-3 ° C. This enables to cook meals that are very sensitive to temperature changes, such as cakes, souffles, puddings.



The capacity indicates the amount of usable space in the oven cavity in litres.



The capacity indicates the amount of usable space in the oven cavity in litres.



With a simple and intuitive interface, the COMPACTscreen provides a pleasant user experience, thanks to the interaction with the knobs.