SFP6390XE



Category	60cm Single Ovens
Product Family	Oven
Power supply	Electric
Heat source	Electric
Cooking method	Thermo-ventilated
Cleaning system	Pyrolytic
EAN code	8017709218829

Aesthetics

Aesthetics	Classic	**Serigraphy type**	Symbols
Colour	Stainless steel	**Door**	With 2 horizontal strips
Finishing	Fingerproof	**Handle**	Classic
Design	Flat	**Handle Colour**	Stainless steel
Material	Stainless steel	**Logo**	Embossed
Type of steel	Brushed	**Control knobs**	Classic
Glass Type	Eclipse	**Controls colour**	Steel effect
Serigraphy colour	Black		

Controls

Display technology	LCD	**No. of controls**	2
Control setting	Control knobs		

Programs / Functions

No. of cooking functions	9
Automatic programmes	20

Traditional cooking functions

- Static
- Fan assisted
- Ciculaire
- Turbo (circulaire + bottom + upper + fan)
- ECO
- Large grill
- Fan grill (large)
- Base
- Fan assisted base

Other functions

- Defrost by time
- Defrost by weight
- Proving
- Sabbath

Cleaning functions

- Pyrolytic
- Pyrolytic eco

Options

Time-setting options	Delay start and automatic end cooking	**Other options**	Keep warm, Eco light
Minute minder	Yes	**Showroom demo option**	Yes
Controls Lock / Child Safety	Yes	**Rapid pre-heating**	Yes

Technical Features

Capacity (Lt)	70 l	**Door**	Cool
Minimum Temperature	30 °C	**Removable door**	Yes
Maximum temperature	280 °C	**Full glass inner door**	Yes
Shelf positions	5	**Removable inner door**	Yes
No. of lights	2	**Total no. of door glasses**	4
Light type	Halogen	**Soft Close hinges**	Yes
Light power	40 W	**Cooling system**	Tangential
Light when door is opened	Yes	**Cooling duct**	Double
Lower heating element power	1200 W	**Speed Reduction Cooling System**	Yes
		Door Lock During Pyrolisis	Yes

Upper heating element - Power	1000 W
Grill element - power	1700 W
Large grill - Power	2700 W
Circular heating element - Power	2000 W
Heating suspended when door is opened	Yes
Usable cavity space dimensions (HxWxD)	360x460x425 mm
Temperature control	Electronic
Cavity material	Easy clean enamel

Performance / Energy Label



Energy efficiency class	A+
Net volume of the cavity	70 litres
Energy consumption per cycle in conventional mode	1.09 kWh
Energy consumption in conventional mode	3.92 MJ
Energy consumption in forced air convection	2.45 MJ
Energy consumption per cycle in fan-forced convection	0.68 kWh
Number of cavities	1
Energy efficiency index	81 %

Accessories Included



Chrome shelf with back and side stop	2
Extra deep enamelled tray (40mm)	1
Grill mesh	1
Telescopic Guide rails, partial Extraction	1

Electrical Connection

Voltage	220-240 V
Plug	No
Current	13 A
Nominal power (W)	3000 W
Frequency (Hz)	50/60 Hz
Power supply cable length	115 cm

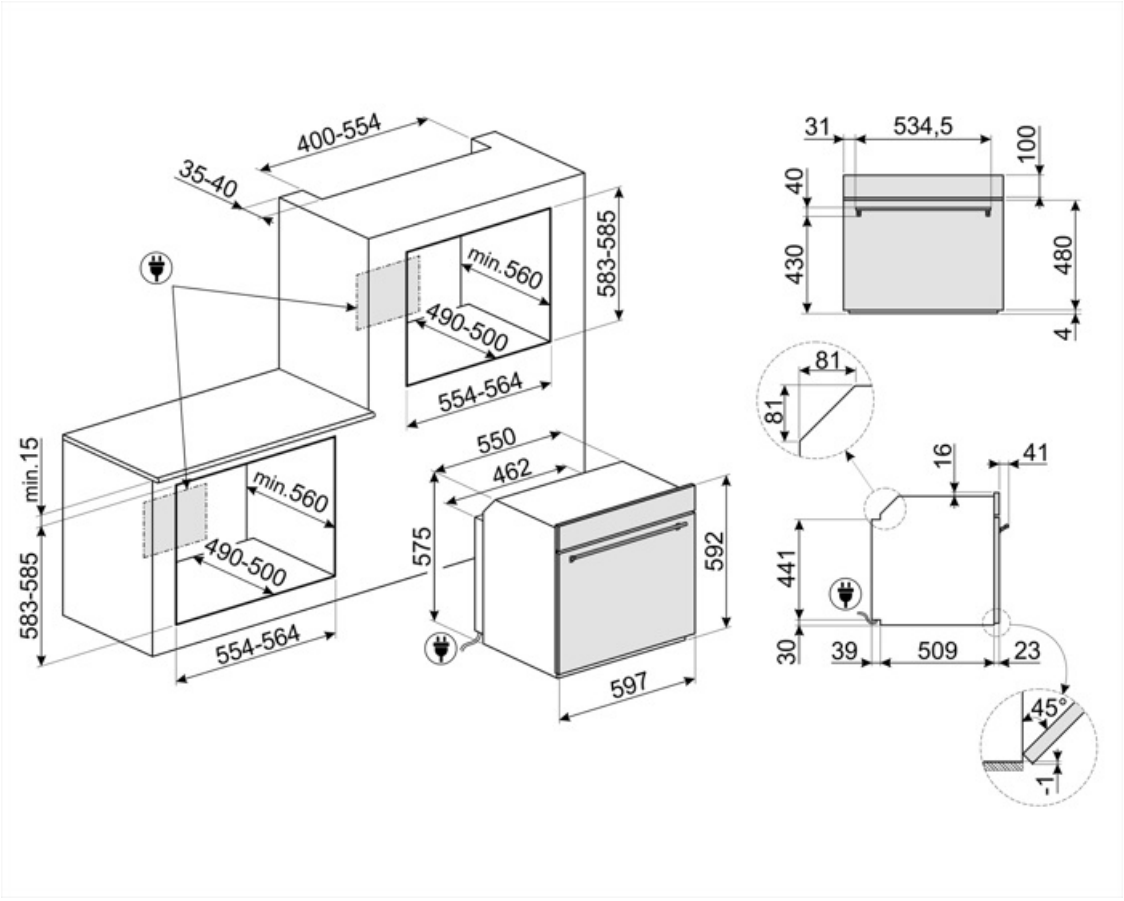
400-554
35-40
min.560
490-500
583-585
554-564
min.15
583-585
554-564
550
462
575
592
597
31
534,5
100
40
430
480
4
81
81
16
41
441
30
39
509
23
45°
1

Compatible Accessories



BN620-1

Enamelled tray, 20mm deep



BN640

Enamelled tray, 40mm deep



GTP

Partially extractable telescopic guides (1 level) Extraction: 300 mm Material: Stainless steel AISI 430 polished



GTT

Totally extractable telescopic guides (1 level) Extraction: 433 mm Material: Stainless steel AISI 430 polished



PALPZ

Pizza shovel with fold away handle width: 315mm length : 325mm



PR3845X

Antifingerprint stainless steel. Cover for furniture in column installation of more ovens



STONE2

Rectangular pizza stone without handles, suitable for 45cm and 60cm wide ovens. Dimensions W42 x H1.8 x D37.5cm. Ideal for cooking pizzas with the same results as a typical wood-fired oven. Can also be used for baking bread, focaccias and other recipes such as pies, flans or biscuits

Symbols glossary



Child lock: some models are fitted with a device to lock the programme/cycle so it cannot be accidentally changed.



Air cooling system: to ensure a safe surface temperatures.



Defrost by weight: With this function the defrosting time is determined



Automatic lighting switches off: for greater energy savings, the lighting switches off automatically after one minute from the start of cooking.



Enamel interior: The enamel interior of all Smeg ovens have a special antacid lining which helps keep the interior clean by reducing the amount of cooking grease adhering to it.



Fresh Touch: Most of Smeg ovens have a "cool door." Thanks to the combination of tangential cooling and internal heat-reflecting glasses, the temperature on the outer surface of the door is maintained below 50° C. In addition to providing safety, this system protects the sides of the furniture from overheating by the oven.



Fan with upper and lower elements: The elements combined with the fan aim to provide more uniform heat, a similar method to conventional cooking, so pre-heat is required. Most suitable for items requiring slow cooking methods.



Lower heating element only: This function is ideal for foods that require extra base temperature without browning, e.g. pastry dishes, pizza. Also suitable for slow cooking of stews and casseroles.



ECO: The combination of the grill, fan and lower element is particularly suitable for cooking small quantities of food.



A+: Energy efficiency class A+ helps to save up to 10% energy compared to class A. Maximum performance with minimum consumption is guaranteed.



Defrost by time: with this function the time of thawing of foods are determined automatically.



Quadruple glazed: Number of glazed doors.



Electric



Fingerprint proof stainless steel: Fingerprint proof stainless steel keeps stainless steel looking as good as new.



Fan assisted base: the mix of fan and lower heating element alone allows to finish cooking foods already cooked on the surface but not internally more quickly. This system is recommended to finish cooking foods that are already well cooked on the surface, but not internally, which therefore require a moderate higher heat. Ideal for any type of food.



Upper and lower element only: a traditional cooking method best suited for single items located in the centre of the oven. the top pf the oven will always be hottest. Ideal for roast, fruit cakes, bread etc.



Circulaire: The combination of the fan and circular element around it gives a hot air cooking method. This provides many benefits including no preheat if cook time is more than 20 minutes, no flavour transfer when cooking different foods at the same time, less energy, and shorter cook times. Good for all types of food.



Grill element: Using of grill gives excellent results when cooking meat of medium and small portions, especially when combined with a rotisserie (where possible). Also ideal for cooking sausages and bacon.

Fan with grill element: The fan reduces the fierce heat from the grill, providing an excellent method of grilling various foods, chops, steaks, sausages etc. giving even browning and heat distribution, without drying out the food. The top two levels recommended for use, and the lower part of the oven can be used to keep items warm at the same time, an excellent facility when cooking a grilled breakfast. Half grill (centre portion only) is ideal for small quantities of food.

Circulaire with upper and lower elements: The use of the fan with both elements allows food to be cooked quickly and effectively, ideal for large joints that require thorough cooking. It offers a similar result to rotisserie, moving the heat around the food, instead of moving the food itself, enabling any size or shape to be cooked.

All glass inner door: All glass inner door, a single flat surface which is simple to keep clean.

The inner door glass: can be removed with a few quick movements for cleaning.

Keep warm: This function allows you to keep precooked foods warm.

Side lights: Two opposing side lights increase visibility inside the oven.

Pyrolitic: Pyrolitic cleaning cycles can be selected as necessary to automatically clean the oven interior.

Pyrolitic: The Eco pyrolitic cleaning function can be selected when the oven has a lighter build up of dirt. This function has a maximum duration of 1.5 hours.

ECO-logic: option allows you to restrict the power limit of the appliance real energy saving.

Air at 40°C provides the perfect environment for proving yeast type dough mixes. Simply select the function and place dough in the cavity for allotted

Rapid preheat: The rapid preheat function can be used to reach the selected temperature in just a few minutes.

Sabbath: This function allows you to cook food whilst respecting the provisions of the Jewish day of rest.

The oven cavity has 5 different cooking levels.

Soft close: all models are equipped with advanced function of smooth closing of the door, which allows the device to close smoothly and quietly.

Telescopic rails: allow you to pull out the dish and check it without having to remove it from the oven entirely.

Electronic control: Allows you to maintain temperature inside the oven with the precision 2-3 ° C. This enables to cook meals that are very sensitive to temperature changes, such as cakes, souffles, puddings.

The capacity indicates the amount of usable space in the oven cavity in litres.

The capacity indicates the amount of usable space in the oven cavity in litres.