SFP9302TN

Category	90 cm
Product Family	Oven
Power supply	Electric
Heat source	ELECTRICITY
Cooking method	Thermo-ventilated
Cleaning system	Pyrolitic
EAN code	8017709331351



Aesthetics

Aesthetic	Classica	**Serigraphy type**	Symbols
Colour	Matt Black	**Door**	With 2 horizontal strips
Finishing	Matt	**Handle**	Classic
Design	Flat	**Handle Colour**	Black
Material	Stainless steel	**Logo**	Silk screen
Glass Type	Eclipse	**Control knobs**	Classic
Serigraphy colour	Silver	**Controls colour**	Black

Controls

Display name	EvoScreen	**Control setting**	Knobs & touch buttons
Display technology	LCD	**No. of controls**	2

Programs / Functions main oven

No. of cooking functions	10

Traditional cooking functions

- Static
- Fan assisted
- Circulaire
- Turbo
- Eco
- Large grill
- Fan grill (large)
- Base
- Circulaire + bottom
- Pizza

Other functions

- Defrost by time
- Leavening
- Stone cooking
- BBQ
- Air-Fry
- Sabbath

Cleaning functions

- Pirolysis

Options

Time-setting options	Delay start and automatic end cooking	**Other options**	Keep warm, Eco light, Brightness, Tones
Minute minder	Yes	**Showroom demo option**	Yes
Controls Lock / Child Safety	Yes	**Rapid pre-heating**	Yes

Technical Features

Capacity (Lt)	115 l	**Circular heating element 2 - Power**	1550 W
Minimum Temperature	25 °C	**Heating suspended when door is opened**	Yes
Maximum temperature	280 °C	**Door opening type**	Standard opening
No. of shelves	5	**Door**	Temperate door
N. of fans	3	**Removable door**	Yes
No. of lights	2	**Full glass inner door**	Yes
Light type	Halogen	**Removable inner door**	Yes
User-replaceable light	Yes	**Total no. of door glasses**	4
Light Power	40 W	**Soft Close hinges**	Yes
Light when door is opened	Yes	**Cooling system**	Tangential
Lower heating element power	1700 W	**Cooling duct**	Double
Upper heating element - Power	1200 W	**Speed Reduction Cooling System**	Yes
Grill element - power	1700 W	**Usable cavity space dimensions (HxWxD)**	371x724x418 mm
Large grill - Power	2900 W		

Circular heating element - Power	1550 W	**Temperature control**	Electronic
		Cavity material	Ever clean Enamel

Performance / Energy Label

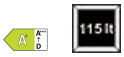

Energy efficiency class	A+	**Energy consumption in forced air convection**	5,47 MJ
Net volume of the cavity	115 l	**Energy consumption per cycle in fan-forced convection**	1,52 kWh
Energy consumption per cycle in conventional mode	0,84 kWh	**Number of cavities**	1
Energy consumption in conventional mode	3,02 MJ	**Energy efficiency index**	81,6 %

Accessories included



Rack with back stop	2	**Insert gird**	1
Enamelled tray (20mm)	1	**Telescopic Guide rails, partial Extraction**	1
Enamelled deep tray (40mm)	1		

Electrical Connection

Voltage	220-240 V	**Voltage 2**	380-415 V
Plug	Not present	**Frequency (Hz)**	50/60 Hz
Current	18 A	**Power supply cable length**	150 cm
Nominal power	4000 W		

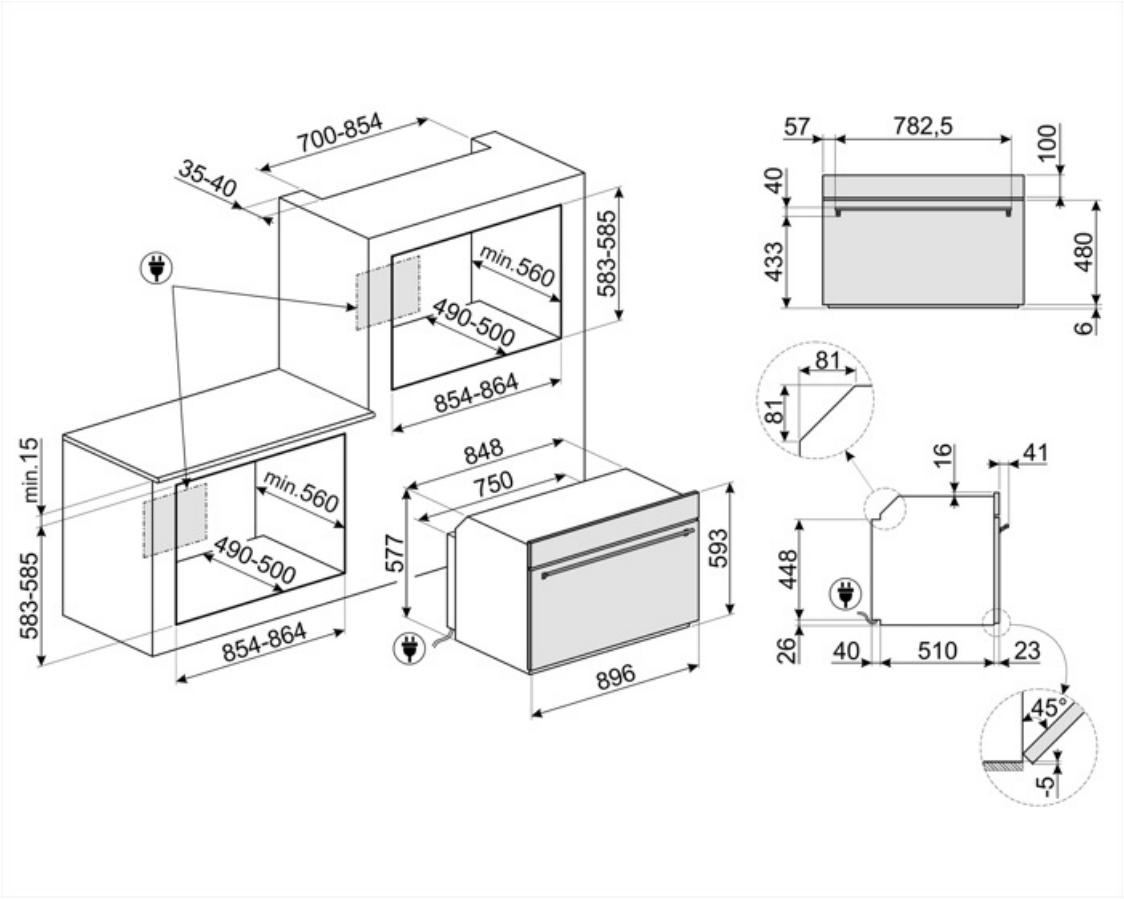
700-854
35-40
583-585
min.560
490-500
854-864
min.15
min.560
490-500
583-585
854-864
848
750
577
593
896
57
782,5
100
40
433
480
6
81
81
16
41
448
26
40
510
23
45°
5

Compatible Accessories



AIRFRY9

Air fryer rack AIRFRY . Ideal for recreating traditional frying in the oven, but with fewer calories and less fat. It allows you to cook quickly and simply dishes such as French fries, fried vegetables and fish, ensuring perfect browning and crispiness.



GTP

Partially extractable telescopic guides (1 level), suitable for traditional ovens. Made in stainless steel, they guarantee stability and facilitate the smooth extraction of the trays.



STONE9

Rectangular pizza stone, suitable for 90cm wide ovens. Dimensions W64 x H2.3 x D37.5cm. Ideal for cooking pizza with the same aroma and crispness as are typical of a wood-fired oven. Can also be used for baking bread, focaccias and other recipes such as pies and flans or biscuits



BBQ9

teflon-coated aluminum grid for 90 cm cavity



GTT

Totally extractable telescopic guides (1 level), suitable for traditional ovens. Made in stainless steel, they guarantee stability and facilitate the smooth extraction of the trays.

Symbols glossary



Triple Fan Technology: The oven is equipped with an exclusive three fan system, which, combined with the increased power of the motors, enables excellent cooking performance. The two large side fans distribute the air around the outer perimeter of the cavity while the smaller central fan increases ventilation by creating a vertical vortex of heat. Accordingly, the temperature within the cavity is uniform, allowing food to be cooked evenly on all five levels, like in professional kitchens.



Child lock: some models are fitted with a device to lock the programme/cycle so it cannot be accidentally changed.



Air cooling system: to ensure a safe surface temperatures.



The new EVOscreen display is enhanced with new, optimised colour graphics: 5 touch buttons control functions and parameters in an extremely simple way.



Automatic lighting deactivation: For greater energy savings, the lighting turns off automatically after one minute from the start of cooking. The option can be disabled via the settings menu. In this case the light will remain on for the entire duration of cooking.



Ever Clean Enamel: Ever Clean enamel is applied electrostatically, corner to corner and edge to edge to prevent cracking or cracks over time. It is a particular pyrolytic enamel, resistant to acids which, in addition to being pleasantly bright, promotes greater cleaning of the oven walls, thanks to its lower porosity. It is baked at over 850 °C and slowly polymerized at a scientifically determined rate to ensure uniform depth and strength. Ever Clean enamel creates an impeccable finish both on the inside of the oven and on the trays, making the surfaces of the oven incredibly easy to maintain over time as it reduces the adhesion of fat during cooking.



Fan assisted: Intense and homogeneous traditional cooking, also suitable for complex recipes. The fan is active and the heat comes from below and from above at the same time. Ventilated cooking ensures a faster and more homogeneous result, leaving fragrant foods outside and moister inside. Ideal for baked pasta, biscuits, roasts and cobblers.



Dedicated cooking function for the double sided plate BBQ. Suitable for recreating succulent and crispy dishes in the oven with the typical taste of grilled cooking. The ribbed side is particularly suitable for meats and cheeses; the smooth side for fish, seafood and vegetables.



A+: Energy efficiency class A+ helps to save up to 10% energy compared to class A. Maximum performance with minimum consumption is guaranteed.



Defrost by time: Manual defrost function. At the end of the set duration, the function stops.



Quadruple glazed: Number of glazed doors.



Electric



Dedicated cooking function for the Air fryer rack AIRFRY . Ideal for recreating traditional frying in the oven, but with fewer calories and less fat. It allows you to cook quickly and simply dishes such as French fries, fried vegetables and fish, ensuring perfect browning and crispiness.



Static: Traditional cooking suitable for the preparation of one dish at a time. The fan is not active and the heat comes from below and from above at the same time. Static cooking is slower and more delicate, ideal in order to get well cooked and dry dishes even inside. Ideal for cooking all types of roasts, fatty meats, bread, filled cakes.

Base: the heat comes only from the bottom of the cavity. The fan is not active. Ideal for sweet and savory pies, cobblers and pizzas. Designed to complete cooking and make food more crunchy. This symbol in gas ovens indicates the gas burner.

Circulaire: it is the perfect function for cooking all types of dishes in a more delicate way. The heat comes from the back of the oven and is distributed quickly and evenly. The fan is active. It is also ideal for cooking on multiple levels without mixing smells and flavors.

Grill: Very intense heat coming only from above from a double heating element. The fan is not active. Provides excellent grilling and gratinating results. Used at the end of cooking, it gives a uniform browning to dishes.

Pizza function: Specific function for cooking pizza in a pan. It allows to obtain a pizza that is soft inside and crispy outside with the topping perfectly cooked, not dry and not burnt.

All glass inner door: All glass inner door, a single flat surface which is simple to keep clean.

KEEP WARM

PYROLYSIS - AUTOMATIC CLEANING FUNCTION: the oven heats up to a temperature approaching 500 ° C and chars grease and food residues into a fine ash that can be easily wiped off with a damp cloth. At such a high temperature, the door locks automatically for safety, while the temperature of the door remains controlled so it is safe to touch User adjustable function based on the level of dirt present in the oven.

Rapid preheating: cooking is preceded by the preheating phase which allows the cooking compartment to reach the set temperature. This option reduces the time by up to 50%.

The oven cavity has 5 different cooking levels.

Circulaire with lower element: The addition of the lower element adds extra heat at the base for food which requires extra cooking.

ECO: low energy consumption cooking: this function is particularly suitable for cooking on a single shelf with low energy consumption. It is recommended for all types of food except those that can generate a lot of moisture (for example vegetables). To achieve maximum energy savings and reduce time, it is recommended to put the food in the oven without preheating the cooking compartment.

Fan grill: very intense heat coming only from above from a double heating element. The fan is active. It allows the optimal grilling of thickest meats. Ideal for large cuts of meat.

Turbo: the heat comes from 3 directions: above, below and from the back of the oven. The fan is active. It allows quick cooking, even on several shelves without mixing the aromas. Ideal for large volumes or foods that require intense cooking.

The inner door glass: can be removed with a few quick movements for cleaning.

Side lights: Two opposing side lights increase visibility inside the oven.

Air at 40°C provides the perfect environment for proving yeast type dough mixes. Simply select the function and place dough in the cavity for allotted

SABBATH: function that allows to cook food respecting Judaism's day of rest provisions.

Soft close: all models are equipped with advanced function of smooth closing of the door, which allows the device to close smoothly and quietly.



Telescopic rails: allow you to pull out the dish and check it without having to remove it from the oven entirely.



The capacity indicates the amount of usable space in the oven cavity in litres.



Dedicated cooking function for the rectangular refractory stone PPR2 Dimensions Ideal for cooking pizzas with the same results as a typical wood-fired oven. Can also be used for baking bread, focaccias and other recipes such as pies, flans or biscuits



Electronic control: Allows you to maintain temperature inside the oven with the precision 2-3 ° C. This enables to cook meals that are very sensitive to temperature changes, such as cakes, souffles, puddings.



The capacity indicates the amount of usable space in the oven cavity in litres.