SFP9302TX

Category	90cm Single Ovens
Product Family	Oven
Power supply	Electric
Heat source	Electric
Cooking method	Thermo-ventilated
Cleaning system	Pyrolytic
EAN code	8017709325466



Aesthetics

Aesthetics	Classic	**Serigraphy type**	Symbols
Colour	Stainless steel	**Door**	With 2 horizontal strips
Finishing	Fingerproof	**Handle**	Classic
Design	Flat	**Handle Colour**	Stainless steel
Material	Stainless steel	**Logo**	Embossed
Type of steel	Brushed	**Control knobs**	Classic
Glass Type	Eclipse	**Controls colour**	Steel effect
Serigraphy colour	Black		

Controls

Display name	EvoScreen	**Control setting**	Knobs & touch buttons
Display technology	LCD	**No. of controls**	2

Programs / Functions

No. of cooking functions	10

Traditional cooking functions

Static

Fan assisted

Ciculaire

Turbo (circulaire + bottom + upper + fan)

ECO

Large grill

Fan grill (large)

Base

Circulaire + bottom

Pizza

Other functions

Defrost by time

Proving

Stone cooking

BBQ

Air-Fry

Sabbath

Cleaning functions

Pyrolytic

Sabbath Mode	Yes

Options

Time-setting options	Delay start and automatic end cooking	**Other options**	Keep warm, Eco light, Brightness, Tones
Minute minder	Yes	**Showroom demo option**	Yes
Controls Lock / Child Safety	Yes	**Rapid pre-heating**	Yes

Technical Features

Capacity (Lt)	115 l	**Circular heating element 2 - Power**	1550 W
Minimum Temperature	25 °C		
Maximum temperature	280 °C	**Heating suspended when door is opened**	Yes
Shelf positions	5	**Door opening type**	Standard opening
Double fan	3	**Door**	Temperate door
No. of lights	2	**Removable door**	Yes
Light type	Halogen	**Full glass inner door**	Yes

User-replaceable light	Yes
Light power	40 W
Light when door is opened	Yes
Lower heating element power	1700 W
Upper heating element - Power	1200 W
Grill element - power	1700 W
Large grill - Power	2900 W
Circular heating element - Power	1550 W
Removable inner door	Yes
Total no. of door glasses	4
Soft Close hinges	Yes
Cooling system	Tangential
Cooling duct	Double
Speed Reduction Cooling System	Yes
Usable cavity space dimensions (HxWxD)	371x724x418 mm
Temperature control	Electronic
Cavity material	Easy clean enamel

Performance / Energy Label



Energy efficiency class	A+
Net volume of the cavity	115 litres
Energy consumption per cycle in conventional mode	0,84 kWh
Energy consumption in conventional mode	3,02 MJ
Energy consumption in forced air convection	5,47 MJ
Energy consumption per cycle in fan-forced convection	1,52 kWh
Number of cavities	1
Energy efficiency index	81,6 %

Accessories Included



Chrome shelf	2
Enamelled tray (20mm)	1
Extra deep enamelled tray (40mm)	1
Grill mesh	1
Telescopic Guide rails, partial Extraction	1

Electrical Connection

Voltage	220-240 V
Plug	No
Current	18 A
Nominal power (W)	4000 W
Voltage 2 (V)	380-415 V
Frequency (Hz)	50/60 Hz
Power supply cable length	150 cm

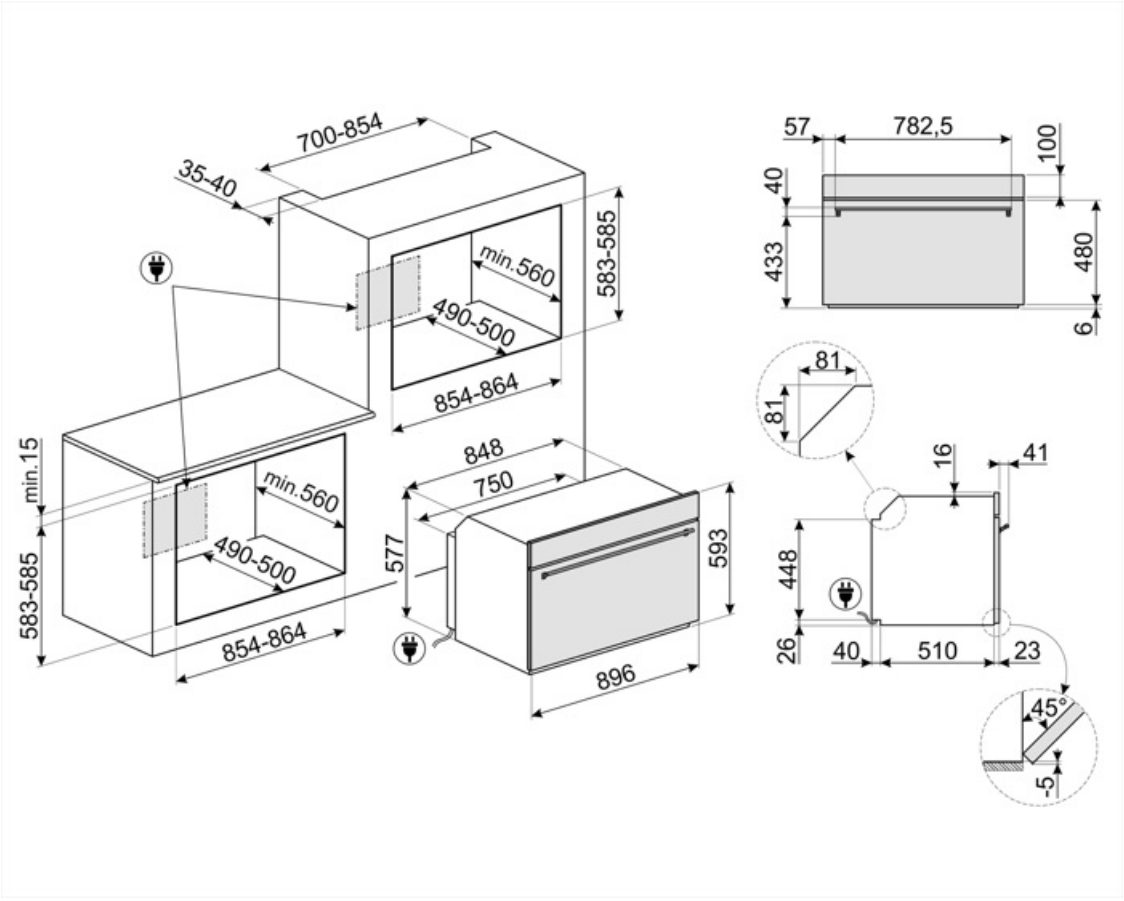
700-854
35-40
583-585
min.560
490-500
854-864
min.15
583-585
min.560
490-500
854-864
848
750
577
593
896
57
782,5
100
40
433
480
6
81
81
16
41
448
26
40
510
23
45°
5

Compatible Accessories



AIRFRY9

Air fryer rack AIRFRY . Ideal for recreating traditional frying in the oven, but with fewer calories and less fat. It allows you to cook quickly and simply dishes such as French fries, fried vegetables and fish, ensuring perfect browning and crispiness.



GTP

Partially extractable telescopic guides (1 level) Extraction: 300 mm Material: Stainless steel AISI 430 polished



STONE9

Rectangular pizza stone, suitable for 90cm wide ovens. Dimensions W64 x H2.3 x D37.5cm. Ideal for cooking pizza with the same aroma and crispness as are typical of a wood-fired oven. Can also be used for baking bread, focaccias and other recipes such as pies and flans or biscuits



BBQ9

teflon-coated aluminum grid for 90 cm cavity



GTT

Totally extractable telescopic guides (1 level) Extraction: 433 mm Material: Stainless steel AISI 430 polished

Symbols glossary



Triple Fan Technology: The oven is equipped with an exclusive three fan system, which, combined with the increased power of the motors, enables excellent cooking performance. The two large side fans distribute the air around the outer perimeter of the cavity while the smaller central fan increases ventilation by creating a vertical vortex of heat. Accordingly, the temperature within the cavity is uniform, allowing food to be cooked evenly on all five levels, like in professional kitchens.



Child lock: some models are fitted with a device to lock the programme/cycle so it cannot be accidentally changed.



Air cooling system: to ensure a safe surface temperatures.



The new EVOscreen display is enhanced with new, optimised colour graphics: 5 touch buttons control functions and parameters in an extremely simple way.



Automatic lighting switches off: for greater energy savings, the lighting switches off automatically after one minute from the start of cooking.



Enamel interior: The enamel interior of all Smeg ovens have a special antacid lining which helps keep the interior clean by reducing the amount of cooking grease adhering to it.



Upper and lower element only: a traditional cooking method best suited for single items located in the centre of the oven. the top pf the oven will always be hottest. Ideal for roast, fruit cakes, bread etc.



Circulaire with lower element: The addition of the lower element adds extra heat at the base for food which requires extra cooking.



ECO: The combination of the grill, fan and lower element is particularly suitable for cooking small quantities of food.



Dedicated cooking function for the double sided plate BBQ. Suitable for recreating succulent and crispy dishes in the oven with the typical taste of g



A+: Energy efficiency class A+ helps to save up to 10% energy compared to class A. Maximum performance with minimum consumption is guaranteed.



Defrost by time: with this function the time of thawing of foods are determined automatically.



Quadruple glazed: Number of glazed doors.



Electric



Fan with upper and lower elements: The elements combined with the fan aim to provide more uniform heat, a similar method to conventional cooking, so pre-heat is required. Most suitable for items requiring slow cooking methods.



Lower heating element only: This function is ideal for foods that require extra base temperature without browning, e.g. pastry dishes, pizza. Also suitable for slow cooking of stews and casseroles.



Circulaire: The combination of the fan and circular element around it gives a hot air cooking method. This provides many benefits including no preheat if cook time is more than 20 minutes, no flavour transfer when cooking different foods at the same time, less energy, and shorter cook times. Good for all types of food.



Grill element: Using of grill gives excellent results when cooking meat of medium and small portions, especially when combined with a rotisserie (where possible). Also ideal for cooking sausages and bacon.

Fan with grill element: The fan reduces the fierce heat from the grill, providing an excellent method of grilling various foods, chops, steaks, sausages etc. giving even browning and heat distribution, without drying out the food. The top two levels recommended for use, and the lower part of the oven can be used to keep items warm at the same time, an excellent facility when cooking a grilled breakfast. Half grill (centre portion only) is ideal for small quantities of food.

Circulaire with upper and lower elements: The use of the fan with both elements allows food to be cooked quickly and effectively, ideal for large joints that require thorough cooking. It offers a similar result to rotisserie, moving the heat around the food, instead of moving the food itself, enabling any size or shape to be cooked.

The inner door glass: can be removed with a few quick movements for cleaning.

Side lights: Two opposing side lights increase visibility inside the oven.

Air at 40°C provides the perfect environment for proving yeast type dough mixes. Simply select the function and place dough in the cavity for allotted

Sabbath: This function allows you to cook food whilst respecting the provisions of the Jewish day of rest.

Soft close: all models are equipped with advanced function of smooth closing of the door, which allows the device to close smoothly and quietly.

Electronic control: Allows you to maintain temperature inside the oven with the precision 2-3 ° C. This enables to cook meals that are very sensitive to temperature changes, such as cakes, souffles, puddings.



The capacity indicates the amount of usable space in the oven cavity in litres.

Dedicated cooking function for the rectangular refractory stone PPR2 Dimensions Ideal for cooking pizzas with the same results as a typical wood-fire

Pizza function: The simultaneous operation of three elements ensures an optimum cooking facility when used with the Smeg pizza stone.

All glass inner door: All glass inner door, a single flat surface which is simple to keep clean.

Keep warm: This function allows you to keep precooked foods warm.

Pyrolitic: Pyrolitic cleaning cycles can be selected as necessary to automatically clean the oven interior.

Rapid preheat: The rapid preheat function can be used to reach the selected temperature in just a few minutes.



The oven cavity has 5 different cooking levels.

Telescopic rails: allow you to pull out the dish and check it without having to remove it from the oven entirely.



The capacity indicates the amount of usable space in the oven cavity in litres.

Dedicated cooking function for the Air fryer rack AIRFRY . Ideal for recreating traditional frying in the oven, but with fewer calories and less fat.