SFPR9606WTPNR

Category	Reduced height 90cm
Product Family	Oven
Power supply	Electric
Heat source	ELECTRICITY
Cooking method	Thermoseal
Cleaning system	Pyrolitic
EAN code	8017709276164

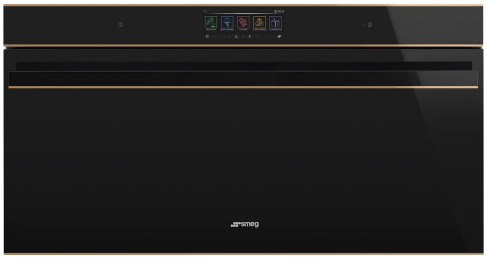

Aesthetics

Aesthetic	Dolce Stil Novo	**Glass Type**	Eclipse
Colour	Black	**Door**	Full glass
Finishing	Glossy	**Handle**	Dolce Stil Novo
Design	Flat	**Handle Colour**	Black
Component finish	Copper	**Logo**	Applied
Material	Glass		

Controls

Display name	VivoScreen max	**No. of display languages**	11
Display technology	TFT		
Control setting	Advanced full touch	**Display languages**	Italiano, English (UK), Français (FR), Nederlands, Español (ES), Português (PT), Svenska, Русский, Deutsch (DE), Dansk, Polski

Programs / Functions

No. of cooking functions	10
Automatic programmes	48
Customisable recipes	64

Traditional cooking functions

- Static
- Fan assisted
- Circulaire
- Turbo
- Eco
- Large grill
- Fan grill (large)
- Base
- Fan assisted bottom
- Pizza

Other functions

- Defrost by time
- Defrost by weight
- Proving
- Keep warm
- Plate rack/warmer
- Sabbath

Cleaning functions

- Pirolysis

Options

Time-setting options	Delay start and automatic end cooking
Minute minder	Yes
Timer	3
Controls Lock / Child Safety	Yes
Other options	Keep warm, Eco light, Language setting, Digital clock display, Brightness, Tones, Tones volume
Cooking with probe thermometer	Yes
Multi-step cooking	Yes, up to 3 steps
Smart cooking	Yes
Showroom demo option	Yes
Demo-tutorial mode	Yes
Touch guide	Yes
Chronology	Yes, the last 10 functions utilised
Rapid pre-heating	Yes
Instant GO	Yes

Technical Features

Capacity (Lt)	85 l
Minimum Temperature	30 °C
Maximum temperature	280 °C
No. of shelves	4
N. of fans	3
No. of lights	2
Light type	Halogen
Circular heating element 2 - Power	1550 W
Heating suspended when door is opened	Yes
Door opening type	Standard opening
Door	Cool
Removable door	Yes

User-replaceable light	Yes
Light Power	40 W
Light when door is opened	Yes
Lower heating element power	1700 W
Upper heating element - Power	1200 W
Grill element - power	1700 W
Large grill - Power	2900 W
Circular heating element - Power	1550 W
Full glass inner door	Yes
Removable inner door	Yes
Total no. of door glasses	4
Soft Close hinges	Yes
Cooling system	Tangential
Cooling duct	Double
Speed Reduction Cooling System	Yes
Usable cavity space dimensions (HxWxD)	283x724x418 mm
Temperature control	Electronic
Cavity material	Ever clean Enamel

Performance / Energy Label



Energy efficiency class	A+
Net volume of the cavity	85 l
Energy consumption per cycle in conventional mode	0,74 kWh
Energy consumption in conventional mode	2,66 MJ
Energy consumption in forced air convection	4,64 MJ
Energy consumption per cycle in fan-forced convection	1,29 kWh
Number of cavities	1
Energy efficiency index	81,3 %

Accessories Included



Rack with back stop	1
Enamelled deep tray (40mm)	1
Insert gird	1
Telescopic Guide rails, total Extraction	1
Temperature probe	Yes, single point

Electrical Connection

Voltage	220-240 V
Plug	No
Current	15 A
Nominal power	3300 W
Frequency (Hz)	50/60 Hz
Power supply cable length	150 cm

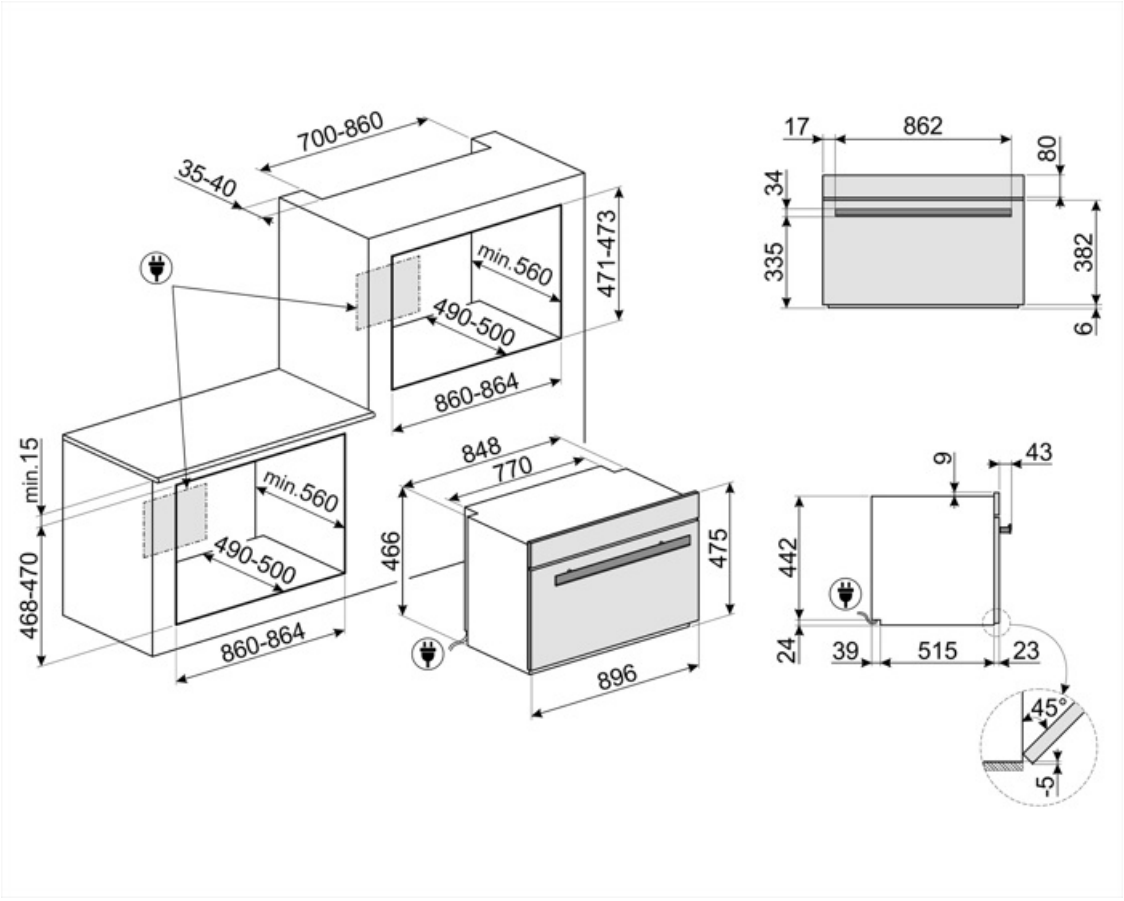
700-860
35-40
471-473
min.560
490-500
860-864
min.15
468-470
min.560
490-500
860-864
848
770
466
475
896
17
862
80
34
335
382
6
9
43
442
24
39
515
23
45°
5

Compatible Accessories



BNP608T

Teflon-coated tray, 8mm depth, to be placed on the grid

Symbols glossary



Triple Fan Technology: The oven is equipped with an exclusive three fan system, which, combined with the increased power of the motors, enables excellent cooking performance. The two large side fans distribute the air around the outer perimeter of the cavity while the smaller central fan increases ventilation by creating a vertical vortex of heat. Accordingly, the temperature within the cavity is uniform, allowing food to be cooked evenly on all five levels, like in professional kitchens.



A+: Energy efficiency class A+ helps to save up to 10% energy compared to class A. Maximum performance with minimum consumption is guaranteed.



Defrost by time: with this function the time of thawing of foods are determined automatically.



The 6.3" VIVOscreen Max display is the most complete and advanced colour touch interface available for the automatic management of firing programmes such as Delta T, Multi-step and SameTime firing.



Automatic lighting switches off: for greater energy savings, the lighting switches off automatically after one minute from the start of cooking.



Enamel interior: The enamel interior of all Smeg ovens have a special antacid lining which helps keep the interior clean by reducing the amount of cooking grease adhering to it.



Fan assisted base: the mix of fan and lower heating element alone allows to finish cooking foods already cooked on the surface but not internally more quickly. This system is recommended to finish cooking foods that are already well cooked on the surface, but not internally, which therefore require a moderate higher heat. Ideal for any type of food.



Upper and lower element only: a traditional cooking method best suited for single items located in the centre of the oven. the top pf the oven will always be hottest. Ideal for roast, fruit cakes, bread etc.



Child lock: some models are fitted with a device to lock the programme/cycle so it cannot be accidentally changed.



Air cooling system: to ensure a safe surface temperatures.



Defrost by weight: With this function the defrosting time is determined



Quadruple glazed: Number of glazed doors.



Electric



Fresh Touch: Most of Smeg ovens have a "cool door." Thanks to the combination of tangential cooling and internal heat-reflecting glasses, the temperature on the outer surface of the door is maintained below 50° C. In addition to providing safety, this system protects the sides of the furniture from overheating by the oven.



Fan with upper and lower elements: The elements combined with the fan aim to provide more uniform heat, a similar method to conventional cooking, so pre-heat is required. Most suitable for items requiring slow cooking methods.



Lower heating element only: This function is ideal for foods that require extra base temperature without browning, e.g. pastry dishes, pizza. Also suitable for slow cooking of stews and casseroles.

Circulaire: The combination of the fan and circular element around it gives a hot air cooking method. This provides many benefits including no preheat if cook time is more than 20 minutes, no flavour transfer when cooking different foods at the same time, less energy, and shorter cook times. Good for all types of food.

ECO: The combination of the grill, fan and lower element is particularly suitable for cooking small quantities of food.

Grill element: Using of grill gives excellent results when cooking meat of medium and small portions, especially when combined with a rotisserie (where possible). Also ideal for cooking sausages and bacon.

Fan with grill element: The fan reduces the fierce heat from the grill, providing an excellent method of grilling various foods, chops, steaks, sausages etc. giving even browning and heat distribution, without drying out the food. The top two levels recommended for use, and the lower part of the oven can be used to keep items warm at the same time, an excellent facility when cooking a grilled breakfast. Half grill (centre portion only) is ideal for small quantities of food.

Keep warm: the function allows to keep cooked food warm.

Pizza function: The simultaneous operation of three elements ensures an optimum cooking facility when used with the Smeg pizza stone.

Circulaire with upper and lower elements: The use of the fan with both elements allows food to be cooked quickly and effectively, ideal for large joints that require thorough cooking. It offers a similar result to rotisserie, moving the heat around the food, instead of moving the food itself, enabling any size or shape to be cooked.

Compact appliances with a height of 48 cm. Perfect solution to meet the functional requirements of kitchen sets of small height. Available in several types and in different styles.

All glass inner door: All glass inner door, a single flat surface which is simple to keep clean.

The inner door glass: can be removed with a few quick movements for cleaning.

INSTANT GO: activating this option allow to start cooking immediately. Preheating is included in the cooking time and the oven will gradually reach the desired temperature Particularly suitable for frozen foods.

KEEP_WARM_72dpi

Side lights: Two opposing side lights increase visibility inside the oven.

Pyrolitic: Pyrolitic cleaning cycles can be selected as necessary to automatically clean the oven interior.

Warming up: An option for dish warming and keeping the prepared meals hot.

Cooking with temperature probe: It is possible to display the temperature detected by the probe and set a target temperature that the dish must reach. When the core of the dish reaches the desired temperature, cooking stops

Air at 40°C provides the perfect environment for proving yeast type dough mixes. Simply select the function and place dough in the cavity for allotted

Rapid preheat: The rapid preheat function can be used to reach the selected temperature in just a few minutes.

Sabbath: This function allows you to cook food during the Sabbath, the Holiday of rest in the Jewish religion, respecting the precepts. The oven works

Touch guide: By holding down any symbol for 3 seconds you can get information on its function

The oven cavity has 4 different cooking levels.

Smart Cooking System: for the perfect cooking it is simply necessary choosing the kind and the weight of food and the cooking temperature: any other setting will be established automatically.

Appliances with Wi-Fi connectivity. Via SmegConnect App is possible to monitor and remotely control appliances through smartphone and tablet (iOS and Android).

Soft close: all models are equipped with advanced function of smooth closing of the door, which allows the device to close smoothly and quietly.

Step cooking: It is possible to set up to 3 cooking phases in the same recipe by varying function, time and / or temperature. At the end of a phase the next one will start automatically

Telescopic rails: allow you to pull out the dish and check it without having to remove it from the oven entirely.

Electronic control: Allows you to maintain temperature inside the oven with the precision 2-3 ° C. This enables to cook meals that are very sensitive to temperature changes, such as cakes, souffles, puddings.

The capacity indicates the amount of usable space in the oven cavity in litres.

Wi-Fi connectivity